Pioneer sound.vision.soul

Service Manual

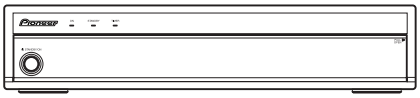

PDP-R06XE

ORDER NO.
ARP3276

MEDIA RECEIVER

PDP-R06XE
PDP-R06FE

THIS MANUAL IS APPLICABLE TO THE FOLLOWING MODEL(S) AND TYPE(S).

Model	Type	Power Requirement	Remarks
PDP-R06XE	WYVIXK5	AC220-240V	
PDP-R06FE	WYVI5	AC220-240V	
PDP-R06FE	WYVIXK5	AC220-240V	

This service manual should be used together with the following manual(s).

Model No.	Order No.	Remarks
PDP-R06XE, PDP-R06FE	ARP3275	EXPLODED VIEWS, BLOCK DIAGRAM etc.

For details, refer to "Important Check Points for good servicing".

PIONEER CORPORATION 4-1, Meguro 1-chome, Meguro-ku, Tokyo 153-8654, Japan
PIONEER ELECTRONICS (USA) INC. P.O. Box 1760, Long Beach, CA 90801-1760, U.S.A.
PIONEER EUROPE NV Haven 1087, Keetberglaan 1, 9120 Melsele, Belgium
PIONEER ELECTRONICS ASIACENTRE PTE. LTD. 253 Alexandra Road, #04-01, Singapore 159936
ⓒ**PIONEER CORPORATION 2005**

T-IZR SEPT. 2005 printed in Japan

SAFETY INFORMATION

This service manual is intended for qualified service technicians ; it is not meant for the casual do-it-yourselfer. Qualified technicians have the necessary test equipment and tools, and have been trained to properly and safely repair complex products such as those covered by this manual.

Improperly performed repairs can adversely affect the safety and reliability of the product and may void the warranty. If you are not qualified to perform the repair of this product properly and safely, you should not risk trying to do so and refer the repair to a qualified service technician.

[Important Check Points for Good Servicing]

In this manual, procedures that must be performed during repairs are marked with the below symbol.
Please be sure to confirm and follow these procedures.

1. Product safety

Please conform to product regulations (such as safety and radiation regulations), and maintain a safe servicing environment by following the safety instructions described in this manual.

① Use specified parts for repair.

Use genuine parts. Be sure to use important parts for safety.

② Do not perform modifications without proper instructions.

Please follow the specified safety methods when modification(addition/change of parts) is required due to interferences such as radio/TV interference and foreign noise.

③ Make sure the soldering of repaired locations is properly performed.

When you solder while repairing, please be sure that there are no cold solder and other debris.
Soldering should be finished with the proper quantity. (Refer to the example)

④ Make sure the screws are tightly fastened.

Please be sure that all screws are fastened, and that there are no loose screws.

⑤ Make sure each connectors are correctly inserted.

Please be sure that all connectors are inserted, and that there are no imperfect insertion.

⑥ Make sure the wiring cables are set to their original state.

Please replace the wiring and cables to the original state after repairs.
In addition, be sure that there are no pinched wires, etc.

⑦ Make sure screws and soldering scraps do not remain inside the product.

Please check that neither solder debris nor screws remain inside the product.

⑧ There should be no semi-broken wires, scratches, melting, etc. on the coating of the power cord.

Damaged power cords may lead to fire accidents, so please be sure that there are no damages.
If you find a damaged power cord, please exchange it with a suitable one.

⑨ There should be no spark traces or similar marks on the power plug.

When spark traces or similar marks are found on the power supply plug, please check the connection and advise on secure connections and suitable usage. Please exchange the power cord if necessary.

⑩ Safe environment should be secured during servicing.

When you perform repairs, please pay attention to static electricity, furniture, household articles, etc. in order to prevent injuries.
Please pay attention to your surroundings and repair safely.

2. Adjustments

To keep the original performance of the products, optimum adjustments and confirmation of characteristics within specification.
Adjustments should be performed in accordance with the procedures/instructions described in this manual.

3. Lubricants, Glues, and Replacement parts

Use grease and adhesives that are equal to the specified substance.
Make sure the proper amount is applied.

4. Cleaning

For parts that require cleaning, such as optical pickups, tape deck heads, lenses and mirrors used in projection monitors, proper cleaning should be performed to restore their performances.

5. Shipping mode and Shipping screws

To protect products from damages or failures during transit, the shipping mode should be set or the shipping screws should be installed before shipment. Please be sure to follow this method especially if it is specified in this manual.

CONTENTS

3. SCHEMATIC DIAGRAM 6
3.1 OVERALL WIRING DIAGRAM 6
3.2 MR MAIN ASSY (1/15) 8
3.3 MR MAIN ASSY (2/15) 10
3.4 MR MAIN ASSY (3/15) 12
3.5 MR MAIN ASSY (4/15) 14
3.6 MR MAIN ASSY (5/15) 16
3.7 MR MAIN ASSY (6/15) 18
3.8 MR MAIN ASSY (7/15) 20
3.9 MR MAIN ASSY (8/15) 22
3.10 MR MAIN ASSY (9/15) 24
3.11 MR MAIN ASSY (10/15) 26
3.12 MR MAIN ASSY (11/15) 28
3.13 MR MAIN ASSY (12/15) 30
3.14 MR MAIN ASSY (13/15) 32
3.15 MR MAIN ASSY (14/15) 34
3.16 MR MAIN ASSY (15/15) 36
3.17 REAR IO ASSY 38
3.18 SR ASSY 40
3.19 FRONT ASSY 42
3.20 LED ASSY 44
3.21 R06 D-TUNER ASSY (1/6) 46
3.22 R06 D-TUNER ASSY (2/6) 48
3.23 R06 D-TUNER ASSY (3/6) 50
3.24 R06 D-TUNER ASSY (4/6) 52
3.25 R06 D-TUNER ASSY (5/6) 54
3.26 R06 D-TUNER ASSY (6/6) 56
3.27 POWER SUPPLY UNIT 58
4. PCB CONNECTION DIAGRAM 60
4.1 MR MAIN ASSY 60
4.2 REAR IO, SR, FRONT and LED ASSYS 64
4.3 R06 D-TUNER ASSY 66

A

B

C

D

E

F

3. SCHEMATIC DIAGRAM

3.1 OVERALL WIRING DIAGRAM

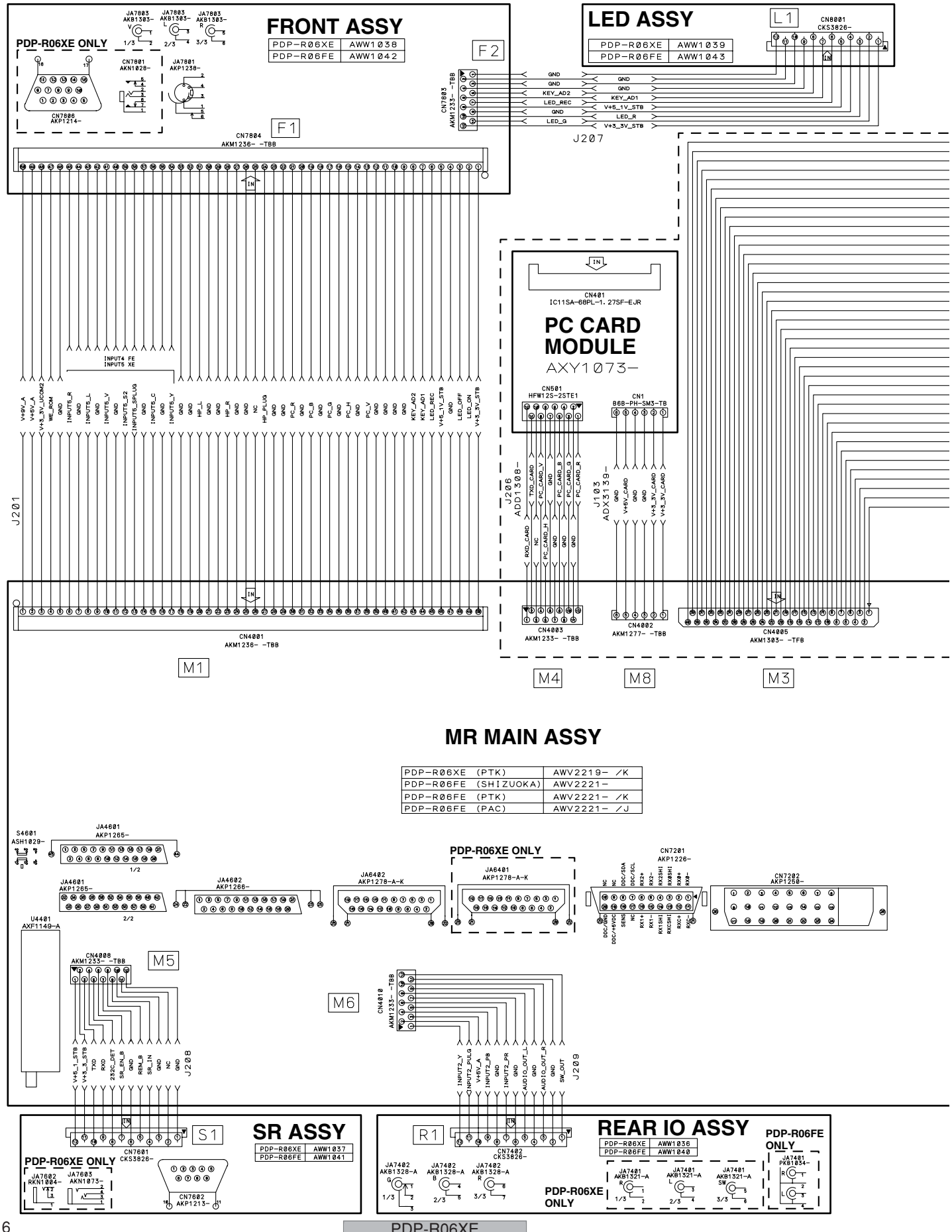

- When ordering service parts, be sure to refer to "EXPLODED VIEWS and PARTS LIST" or "PCB PARTS LIST".
- The ⚠ mark found on some component parts indicates the importance of the safety factor of the part. Therefore, when replacing, be sure to use parts of identical designation.
- The encircled numbers denote measuring point in the schematic diagram. Waveforms, refer to service manual (ARP3275).

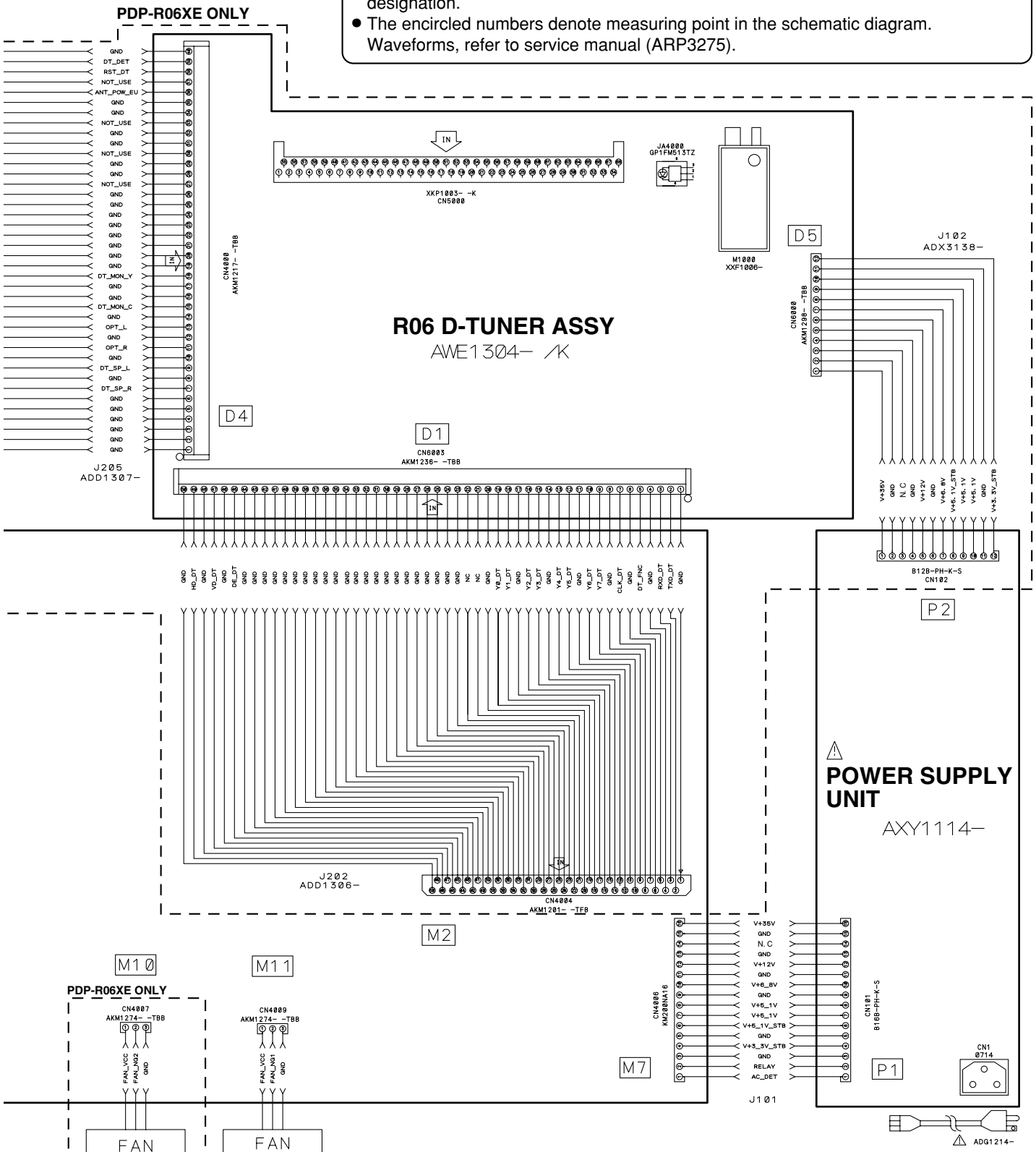

	J101	J201	J207	J208	J209
PDP–R06XE (PTK)	ADX3191–	ADD1305–	ADD1309–	ADD1213–	ADD1310–
PDP–R06FE (SHIZUOKA)	ADX3191–	ADD1305–	ADD1309–	ADD1213–	ADD1310–
PDP–R06FE (PTK)	ADX3191–	ADD1305–	ADD1309–	ADD1213–	ADD1310–
PDP–R06FE (PAC)	ADX3140–	ADD1311–	ADD1314–	ADD1328–	ADD1339–

3.2 MR MAIN ASSY (1/15)

MR MAIN ASSY (1/15)

• BOARD IF BLOCK

NO USE
: STANDBY

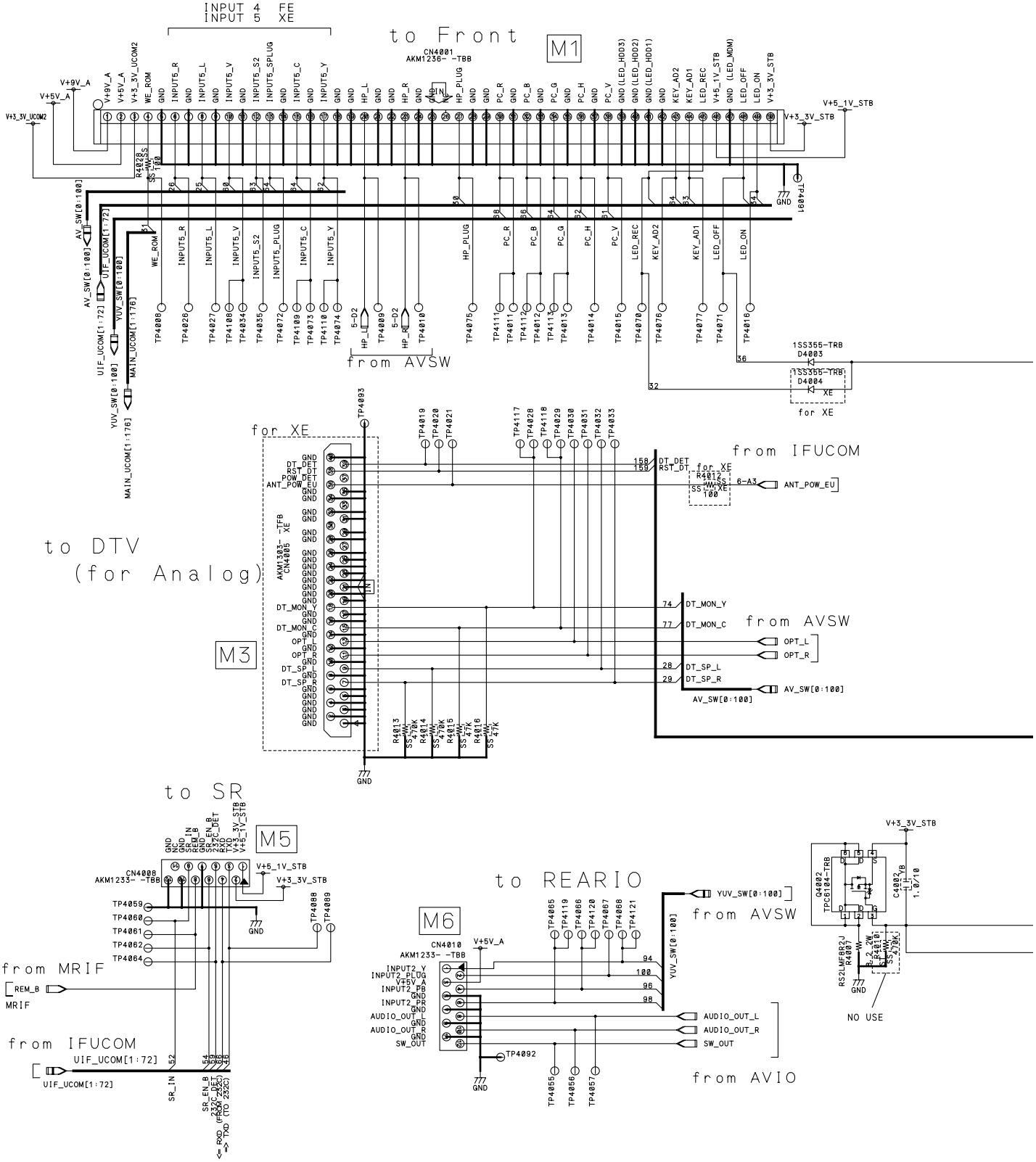

ITEM	USED	MODEL: PDP-R06XE AWV2219- (XE) VACANT	PDP-R06FE AWV2221- (FE) VACANT
R	4001-4007, 4010-4033	4010, 4017, 4018, 4025	4004-4006, 4010, 4012, 4024, 4026
C	4002-4003		
Q	4001-4004		
IC			
F			
X			
L	4001, 4002	4001, 4002	4001, 4002
D	4001-4005		4004
CN	4001-4010		4002-4005, 4007

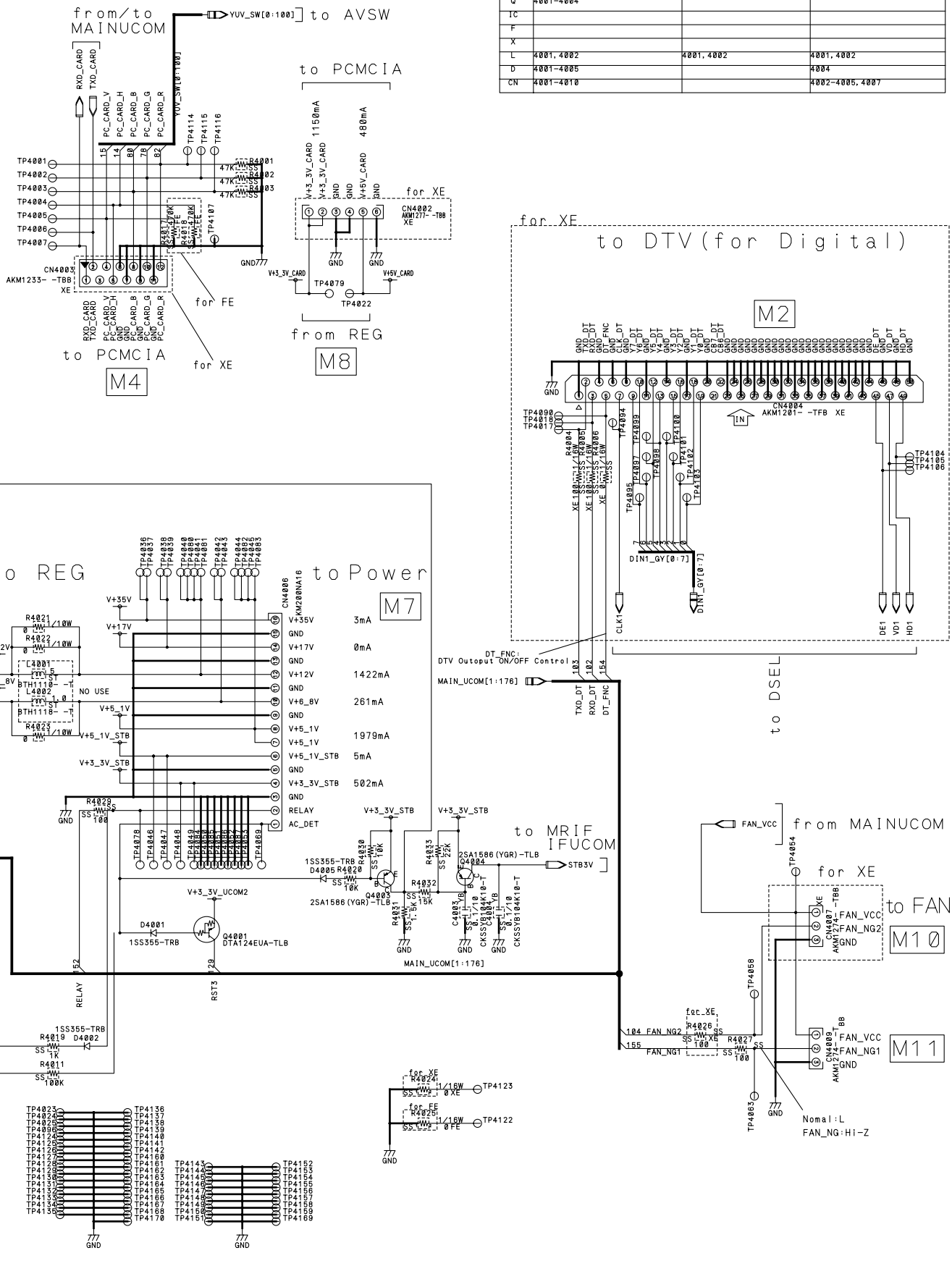

3.3 MR MAIN ASSY (2/15)

MR MAIN ASSY (2/15)

• REG BLOCK

NO USE
: STANDBY

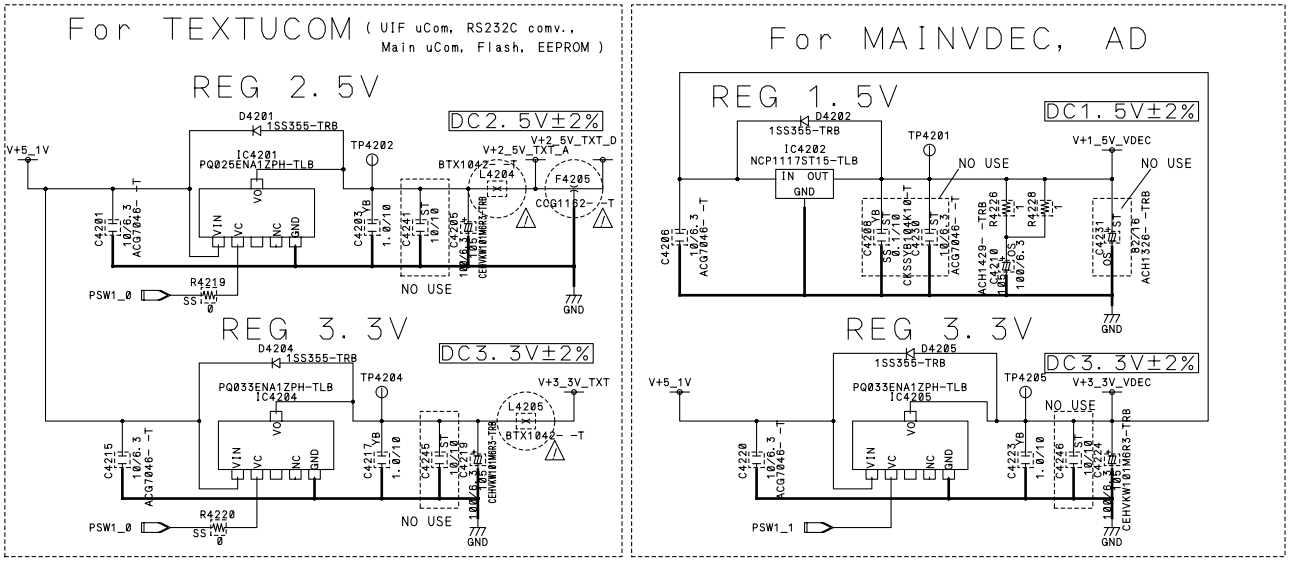

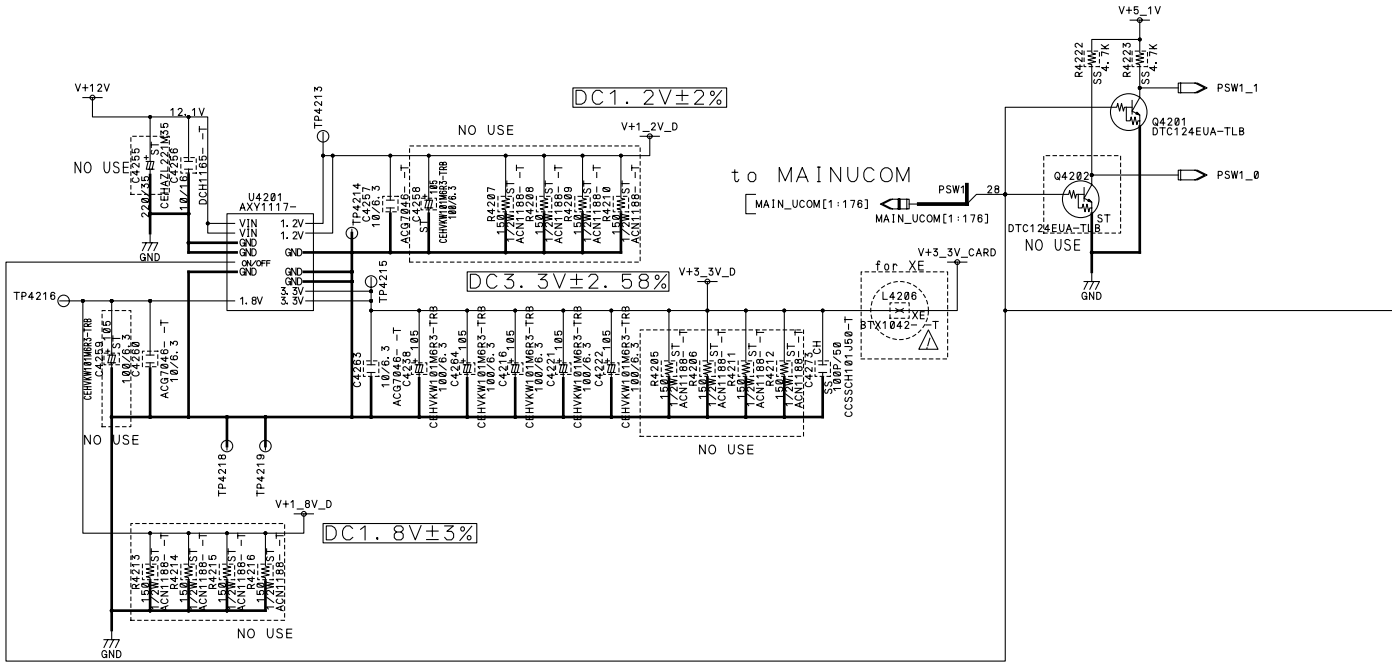

ITEM	USED	MODEL: PDP-R06XE	PDP-R06FE
		AWV2219- (XE) VACANT	AWV2221- (FE) VACANT
R	4201-4228	4203-4217, 4224, 4225	4202-4217, 4224, 4225
C	4201-4270, 4272, 7273	4208, 4230, 4231, 4239, 4241-4243, 4245-4249, 4254, 4255, 4258, 4259, 4265, 4266, 4270, 7272	4202, 4207, 4208, 4218, 4230, 4231, 4233-4237, 4239, 4241-4243, 4245-4249, 4254, 4255, 4258, 4259, 4265-4268, 4270, 7272
Q	4201-4203	4202	4202, 4203
IC	4201-4212	4207	4207, 4208, 4210
F	4201-4205, 4207		4204
X			
L	4201-4206		4202, 4206
D	4201-4209, 4211	4207	4207, 4208
U	4201		

NO USE

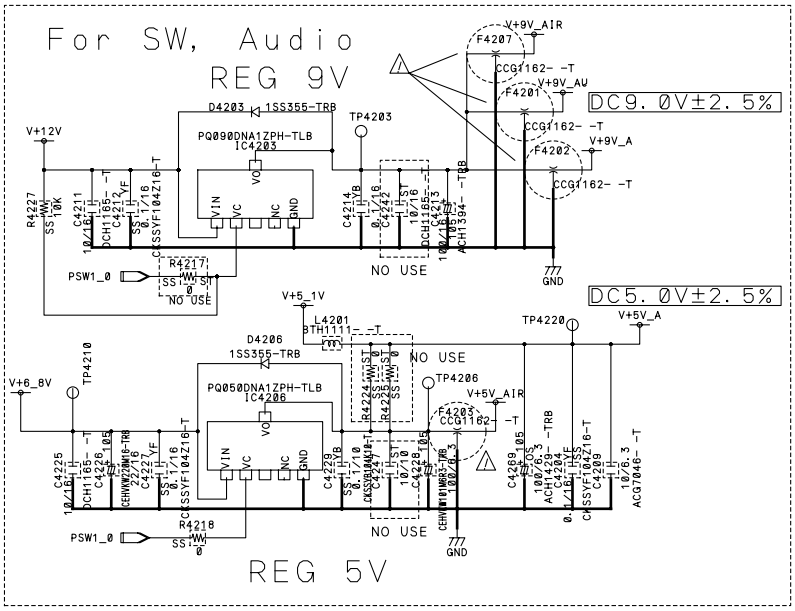

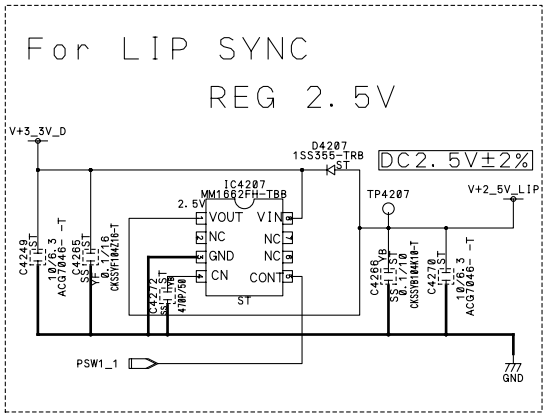

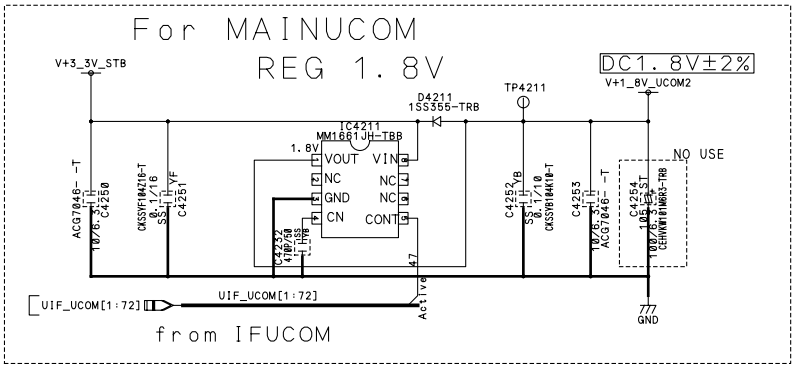

for XE

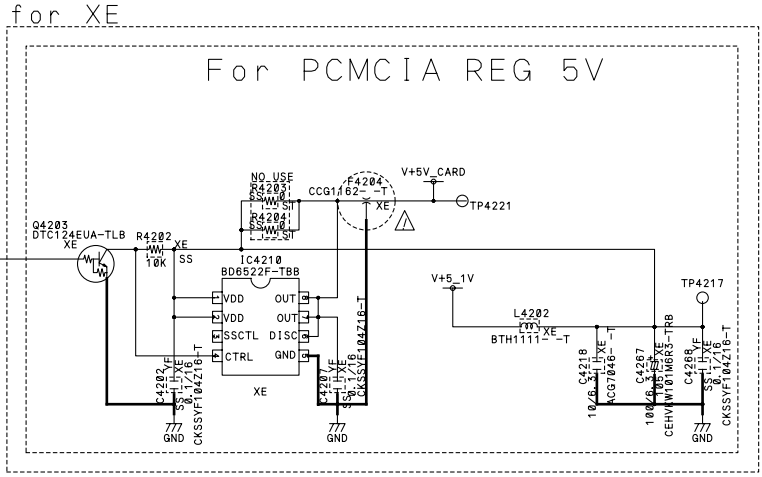

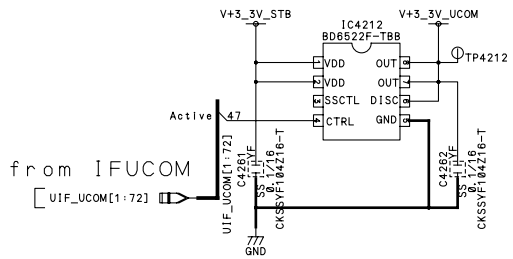

3.4 MR MAIN ASSY (3/15)

MR MAIN ASSY (3/15)

• TUNER BLOCK

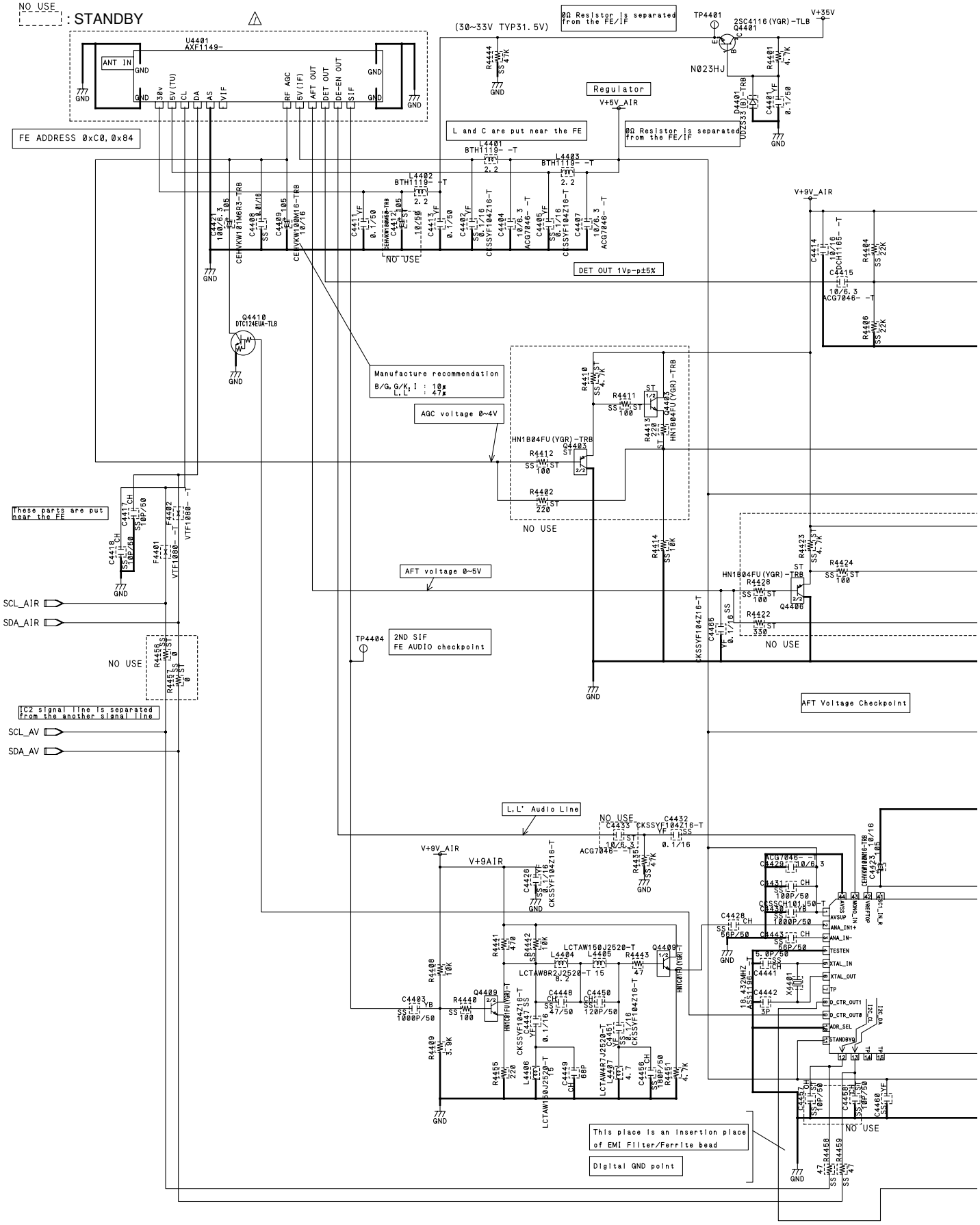

MODEL		PDP-R06XE	PDP-R06FE
ITEM	USED	AWV2219- (XE) VACANT	AWV2221- (FE) VACANT
R	4401-4462	4402, 4410-4413, 4422-4424, 4428, 4429, 4434, 4445, 4452, 4456, 4457, 4461, 4462	4402, 4410-4413, 4422-4424, 4428, 4429, 4434, 4445, 4452, 4456, 4457, 4461, 4462
C	4401-4426, 4428-4461, 4463, 4465	4412, 4419, 4433, 4436, 4452, 4453, 4457, 4458, 4463	4412, 4419, 4433, 4436, 4452, 4453, 4457, 4458, 4463
Q	4401-4411, 4413-4415	4403, 4406, 4411	4403, 4406, 4411
IC	4401		
F	4401-4403	4403	4403
X	4401		
L	4401-4408	4408	4408
D	4401, 4403		
U	4401		

This block is separated from the FE/IF and put near the Regulator block.

This capacitor is put near this block

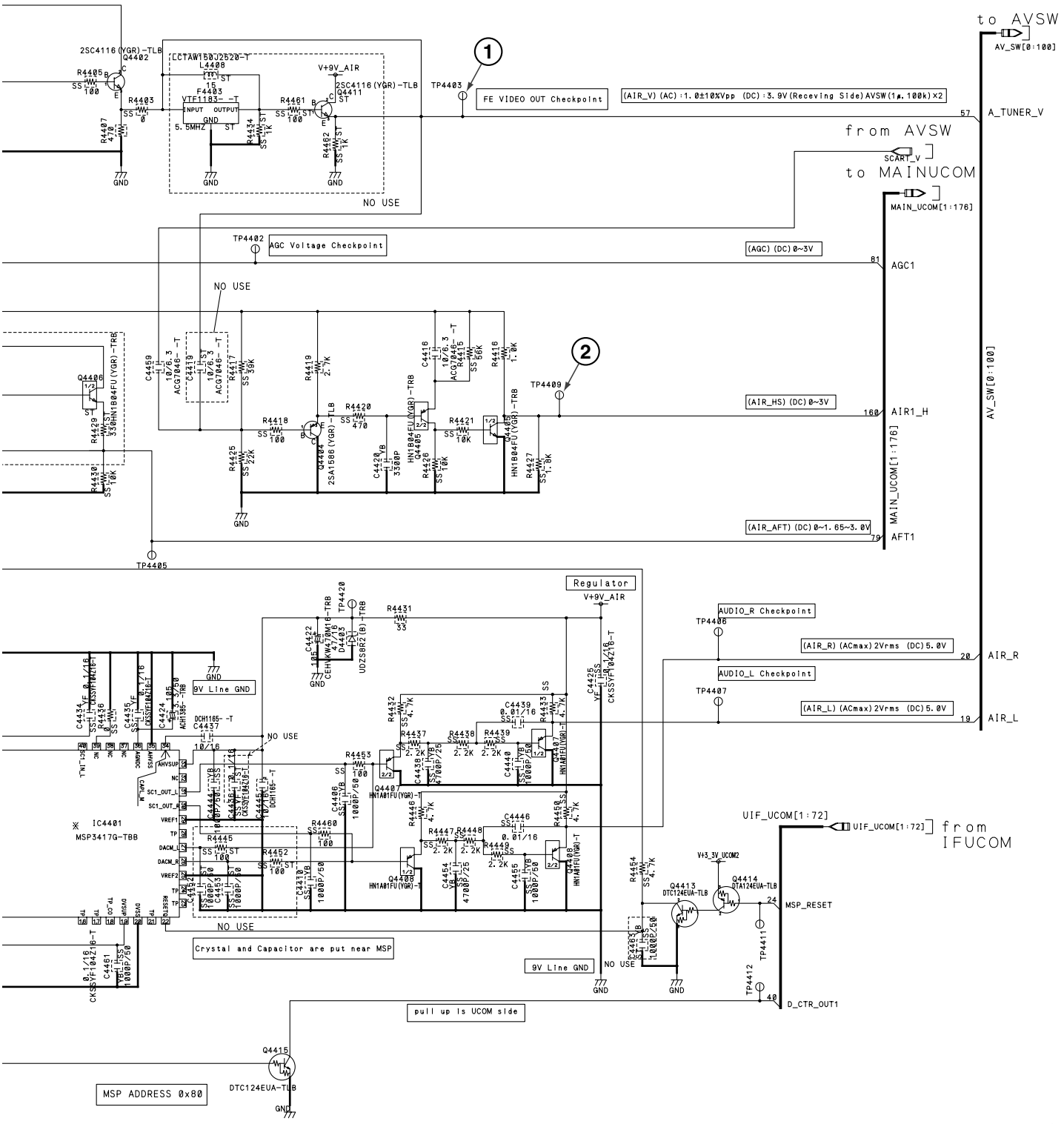

MR MAIN ASSY (4/15)

• AV IO BLOCK

NO USE

: STANDBY

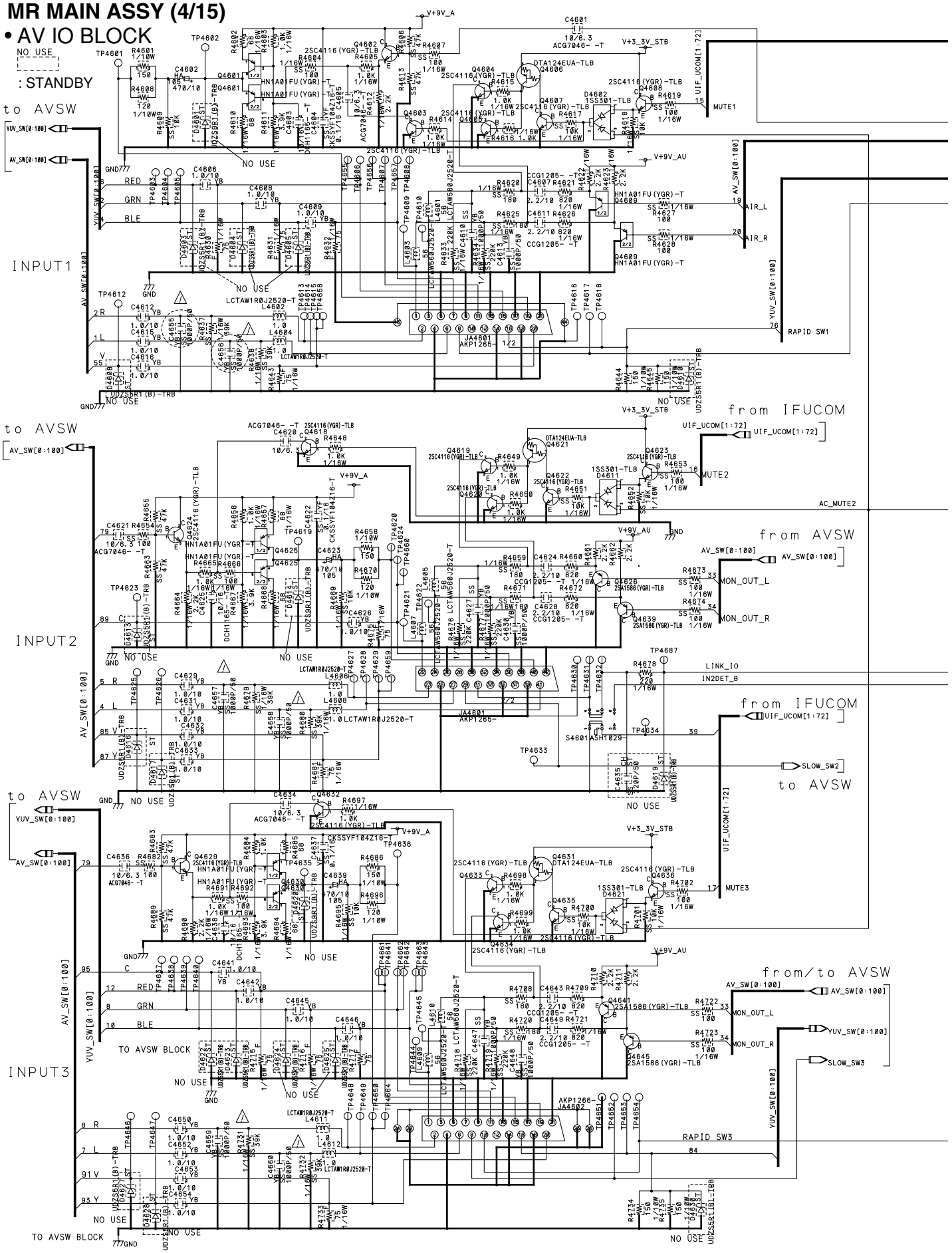

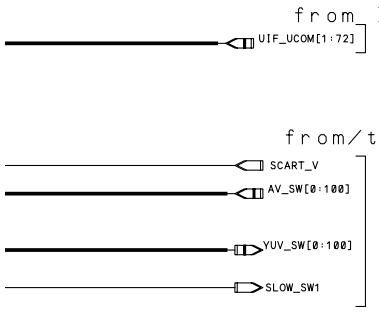

ITEM	USED	MODEL: PDP-R06XE AWV2219- (XE) VACANT	PDP-R06FE AWV2221- (FE) VACANT
R	4601-4735		4687, 4688, 4703-4707, 4712-4714
C	4601-4662	4618, 4635, 4640	4618, 4635, 4640, 4635, 4640, 4644
Q	4601-4646		4627, 4628, 4637, 4638, 4640
IC			
F			
X			
L	4601-4612		
D	4601-4608, 4610-4617, 4619-4628, 4630	4601, 4603-4605, 4608, 4610, 4613, 4614, 4616, 4617, 4619, 4620, 4622-4625, 4627, 4628, 4630	4601, 4603-4605, 4608, 4610, 4612-4617, 4619, 4620, 4622-4625, 4627, 4628, 4630
JA	4601, 4602		
S	4601		

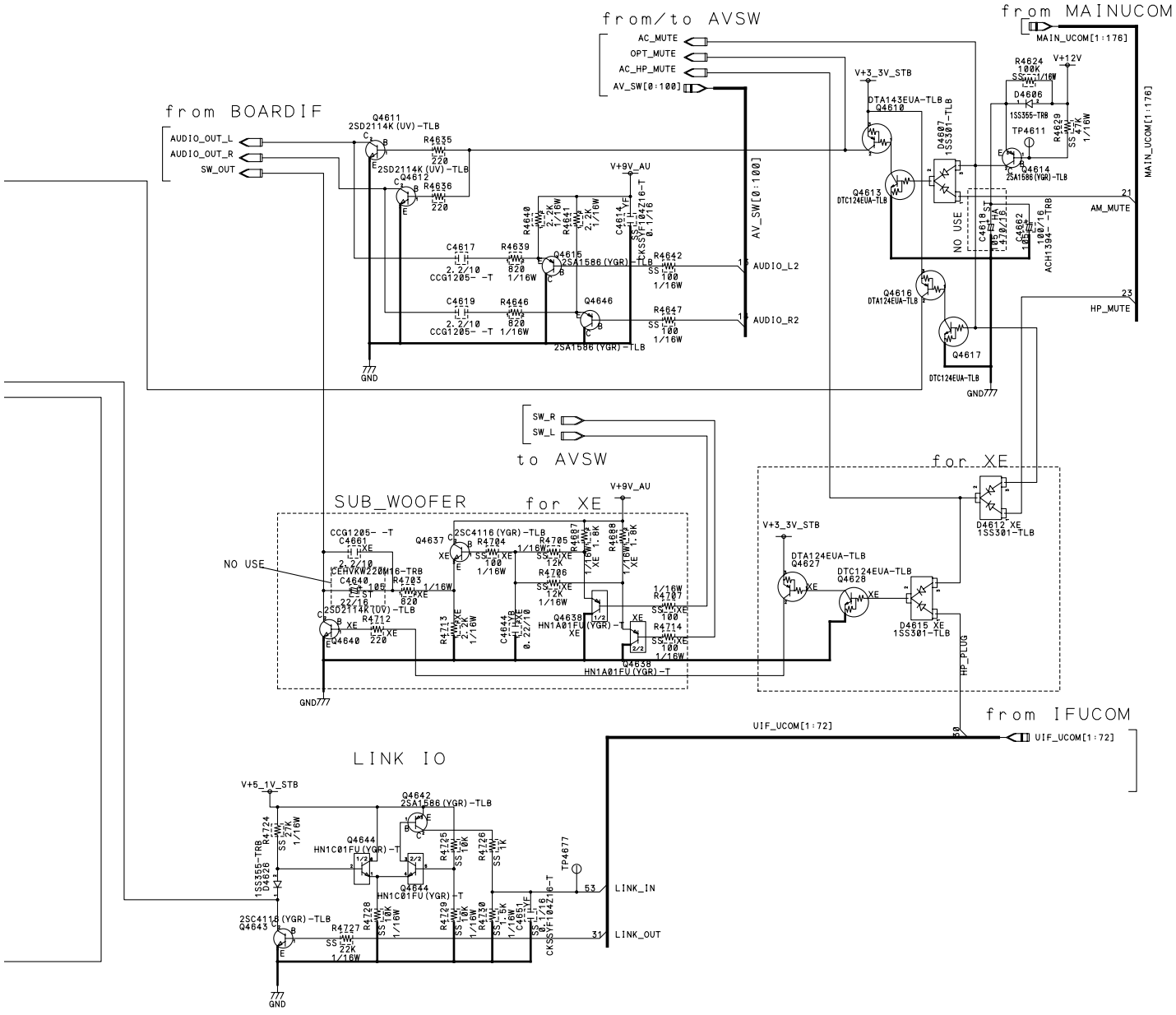

3.6 MR MAIN ASSY (5/15)

MR MAIN ASSY (5/15)

- AV SW BLOCK

NO USE : STANDBY

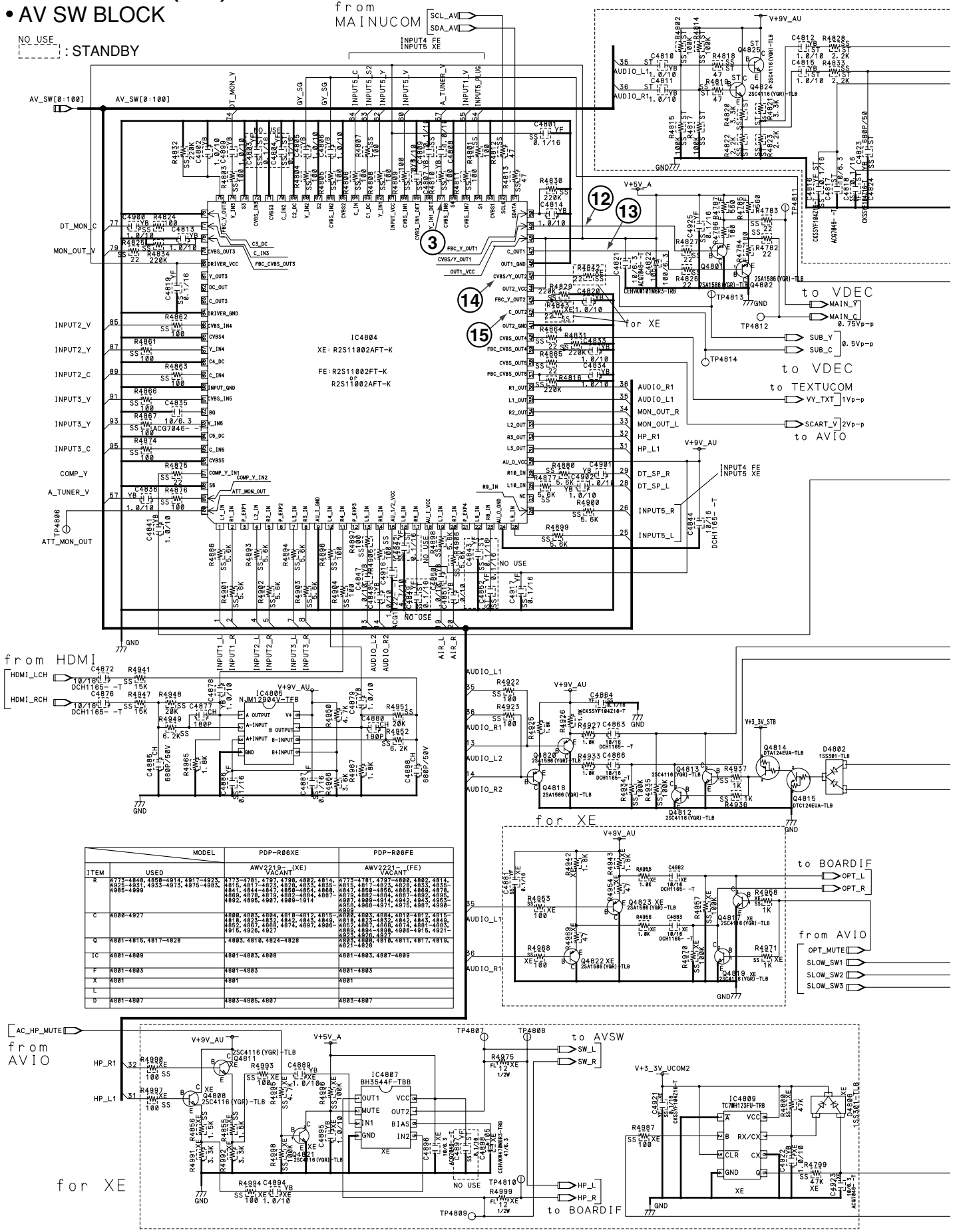

ITEM	MODEL / USED	PDP-R06XE AWV2219- (XE) VACANT	PDP-R06FE AWV2221- (FE) VACANT
R	4773-4848, 4850-4914, 4917-4923, 4925-4931, 4933-4973, 4975-4983, 4985-4999	4773-4781, 4797, 4798, 4802, 4814, 4815, 4817-4823, 4828, 4833, 4835-4841, 4844-4847, 4850-4854, 4868, 4869, 4878, 4879, 4882-4884, 4887-4892, 4895, 4907, 4909-1914	4773-4781, 4797-4800, 4802, 4814, 4815, 4817-4823, 4828, 4833, 4835-4847, 4850-4856, 4868, 4869, 4878, 4879, 4882-4884, 4887-4892, 4895, 4907, 4909-4914, 4942, 4943, 4953-4956, 4968-4971, 4975, 4987, 4990-4999
C	4800-4927	4800, 4803, 4804, 4810-4812, 4815-4818, 4823-4832, 4842, 4843, 4849, 4852, 4867, 4868, 4874, 4897, 4906-4915, 4926, 4927	4800, 4803, 4804, 4810-4812, 4815-4818, 4823-4832, 4842, 4843, 4849, 4852, 4867, 4868, 4874, 4881-4883, 4889, 4894-4898, 4906-4915, 4921-4923, 4926, 4927
Q	4801-4815, 4817-4828	. 4803, 4810, 4824-4828	4803, 4808, 4810, 4811, 4817, 4819, 4821-4828
IC	4801-4809	4801-4803, 4808	4801-4803, 4807-4809
F	4801-4803	4801-4803	4801-4803
X	4801	4801	4801
L			
D	4801-4807	4803-4805, 4807	4803-4807

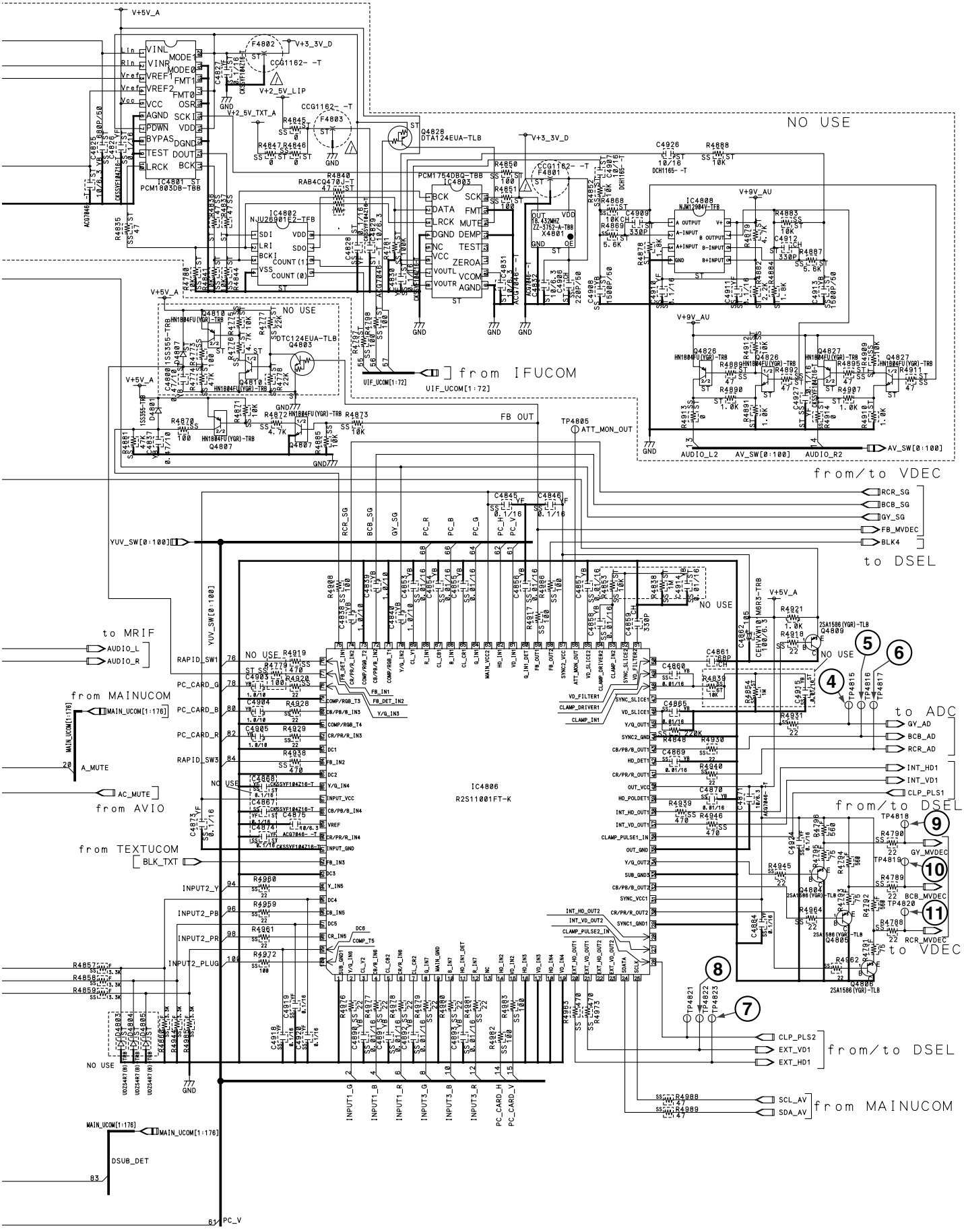
NO USE
from IFUCOM
UIF_UCOM[1:72]
from/to VDEC
RCR_SG
BCB_SG
GY_SG
FB_MVDEC
BLK4
to DSEL
YUV_SW[0:100]
to MRIF
AUDIO_L
AUDIO_R
from MAINUCOM
MAIN_UCOM[1:176]
A_MUTE
AC_MUTE
from AVIO
from TEXTUCOM
BLK_TXT
IC4806
R2S11001FT-K
to ADC
GY_AD
BCB_AD
RCR_AD
INT_HD1
INT_VD1
CLP_PLS1
from/to DSEL
GY_MVDEC
BCB_MVDEC
RCR_MVDEC
to VDEC
CLP_PLS2
EXT_VD1
EXT_HD1
from/to DSEL
SCL_AV
SDA_AV
from MAINUCOM
DSUB_DET
PC_V
FB OUT
TP4805
ATT_MON_OUT
AV_SW[0:100]
AUDIO_L2
AUDIO_R2

3.7 MR MAIN ASSY (6/15)

MR MAIN ASSY (6/15)

• IF UCOM BLOCK

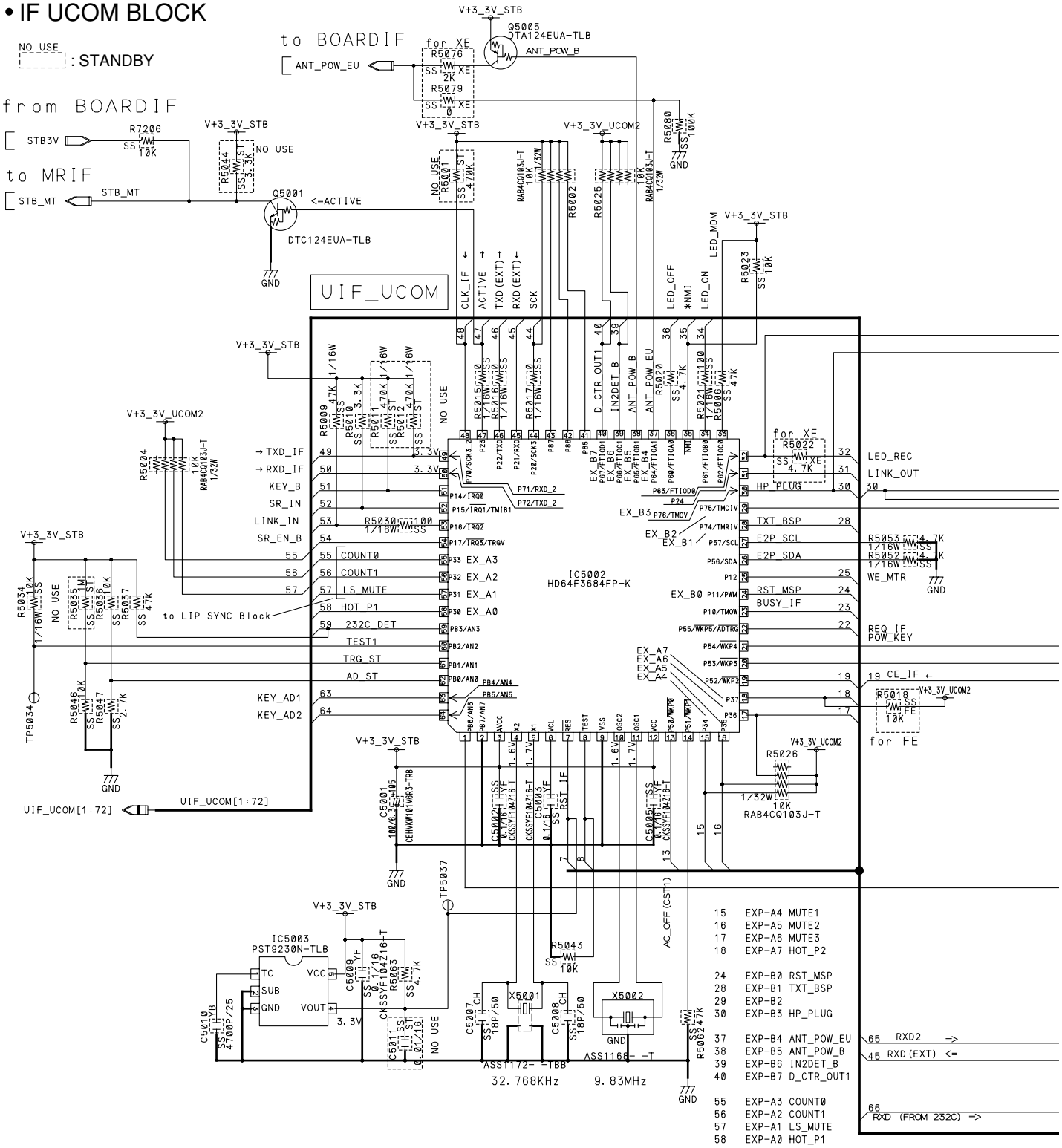

ITEM	USED	MODEL: PDP-R06XE AWV2219- (XE) VACANT	MODEL: PDP-R06FE AWV2221- (FE) VACANT
R	5001-5023, 5025, 5026, 5030-5032, 5034-5037, 5043, 5044, 5046, 5047, 5050-5053, 5055, 5060, 5062-5073, 5076, 5077, 5079, 5080, 7206	5001, 5005, 5008, 5011-5014, 5018, 5031, 5035, 5044, 5051, 5072	5001, 5005, 5011-5014, 5022, 5035, 5044, 5051, 5072, 5076, 5079
C	5001-5005, 5007-5012	5011	5011
Q	5001, 5004, 5005	5004	5004
IC	5001-5004		
F			
X	5001, 5002		
L			

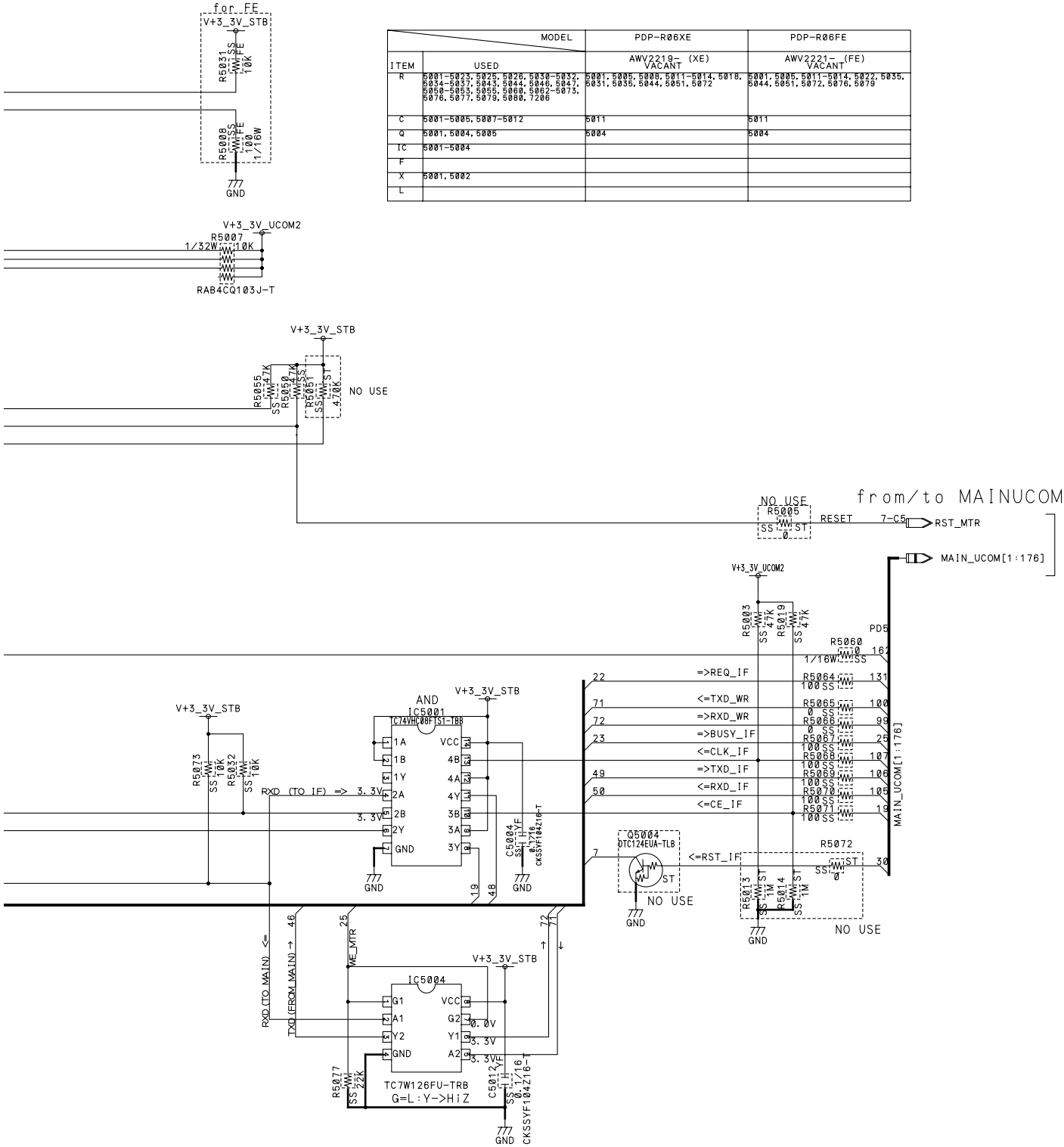

MR MAIN ASSY (7/15)

• MAIN UCOM BLOCK

NO USE : STANDBY

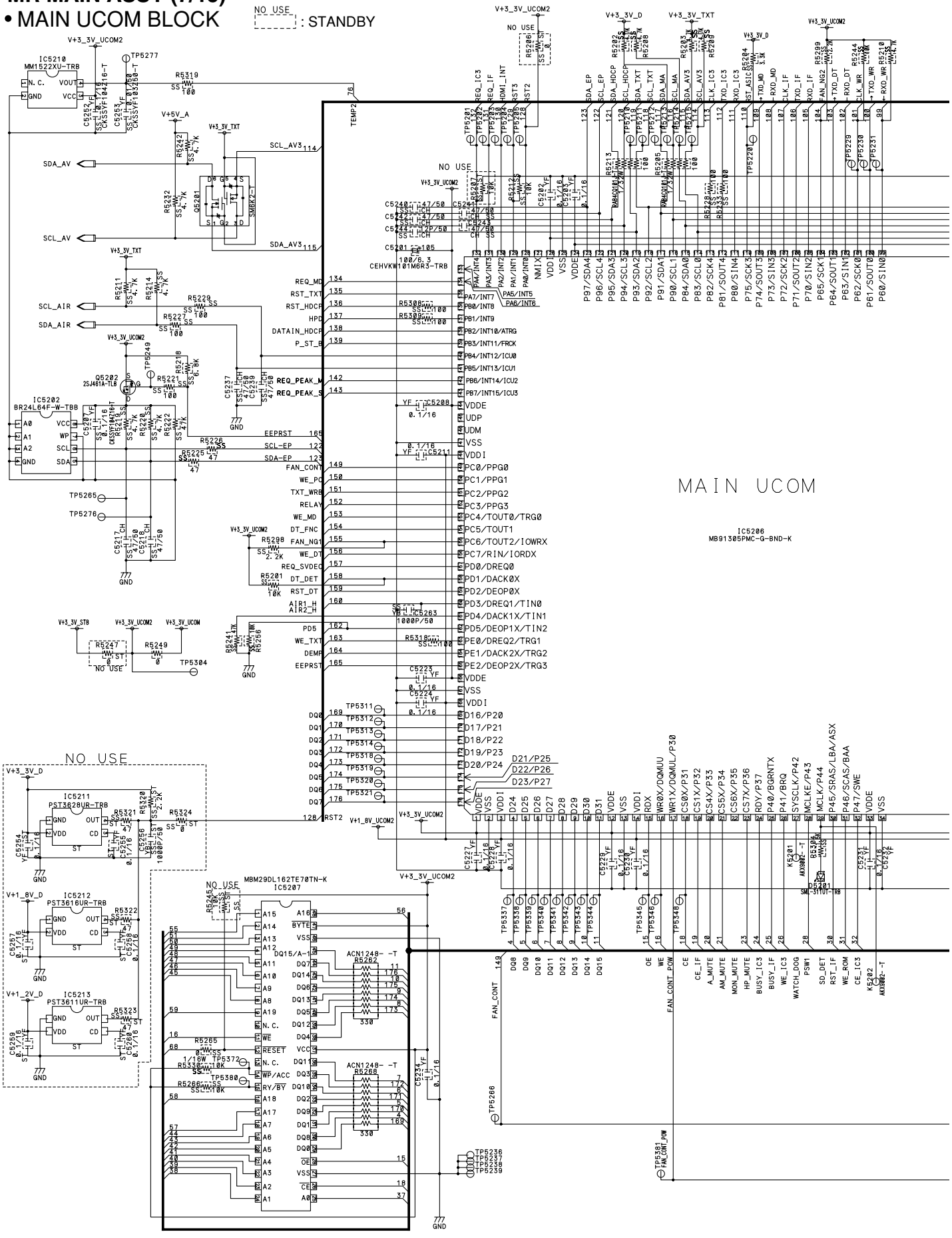

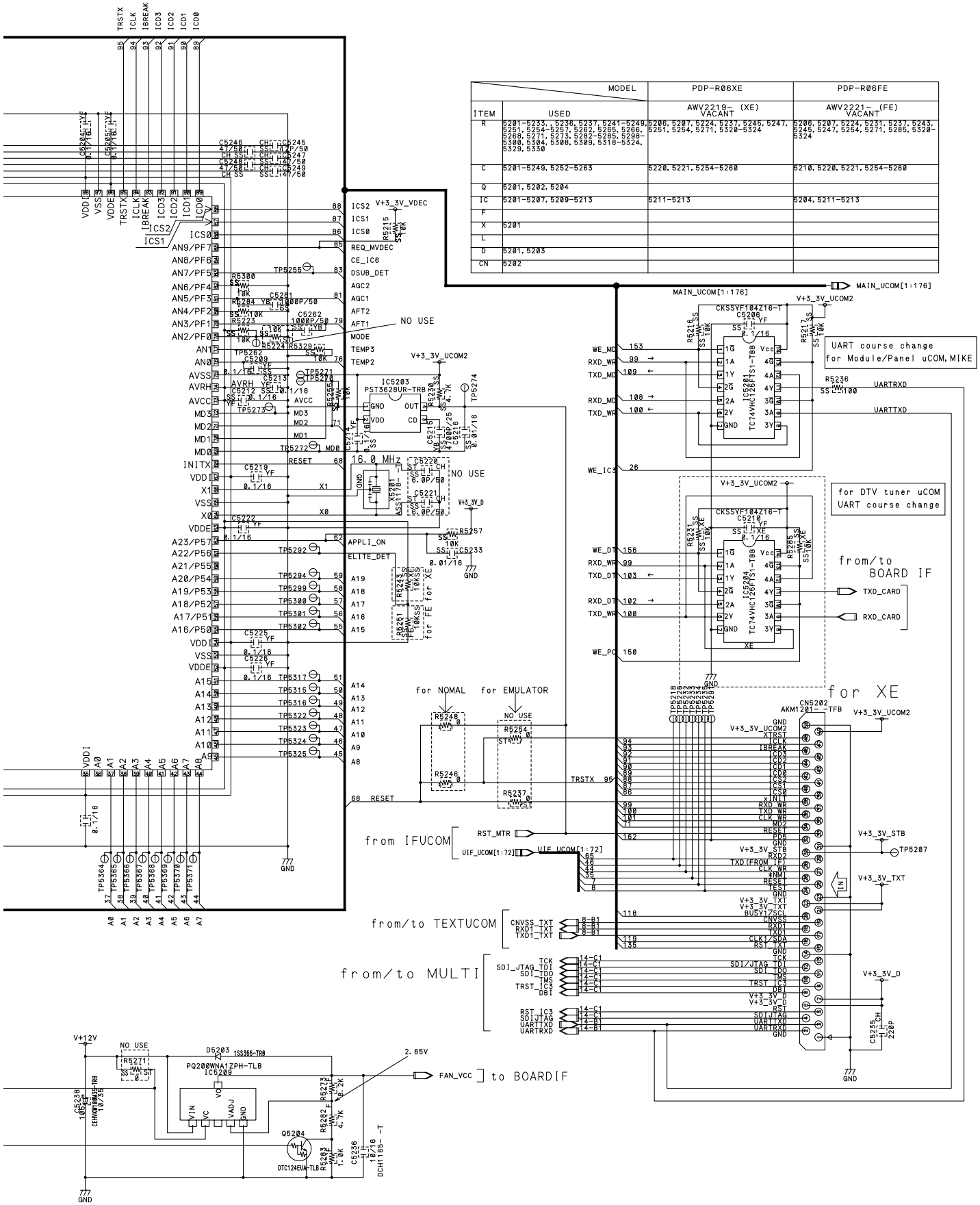

ITEM	MODEL: USED	PDP-R06XE: AWV2219- (XE) VACANT	PDP-R06FE: AWV2221- (FE) VACANT
R	5201-5233, 5236,5237,5241-5249, 5251, 5254-5257, 5262, 5265, 5266, 5268, 5271, 5273, 5282-5285, 5298-5300, 5304, 5308, 5309, 5318-5324, 5329, 5330	5206, 5207, 5224, 5237, 5245, 5247, 5251, 5254, 5271, 5320-5324	5206, 5207, 5224, 5231, 5237, 5243, 5245, 5247, 5254, 5271, 5285, 5320-5324
C	5201-5249, 5252-5263	5220, 5221, 5254-5260	5210, 5220, 5221, 5254-5260
Q	5201, 5202, 5204		
IC	5201-5207, 5209-5213	5211-5213	5204, 5211-5213
F			
X	5201		
L			
D	5201, 5203		
CN	5202		

MR MAIN ASSY (8/15)

• TEXT UCOM BLOCK

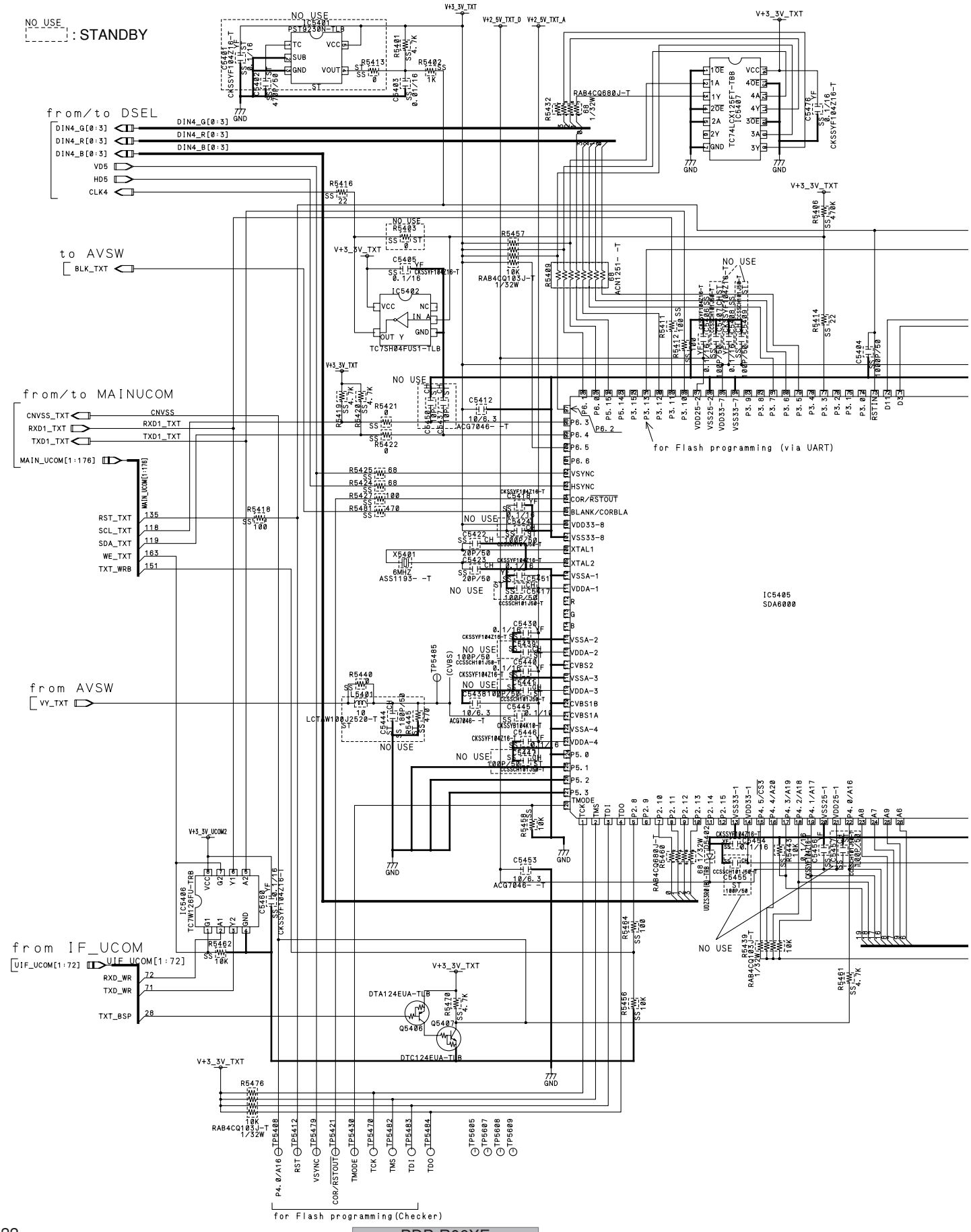

MODEL		PDP-R06XE	PDP-R06FE
ITEM	USED	AWV2219- (XE) VACANT	AWV2221- (FE) VACANT
R	5401-5406, 5409, 5411-5425, 5427-5432, 5434-5437, 5439-5441, 5443, 5445, 5449, 5456-5458, 5460-5462, 5464, 5470, 5476, 5481	5403, 5413, 5431, 5437, 5445	5403, 5413, 5431, 5437, 5445
C	5401-5451, 5453-5460, 5476	5401, 5402, 5407, 5409, 5411, 5414 5415, 5417, 5419, 5421, 5424, 5426, 5428, 5432, 5433, 5436, 5437, 5439, 5441, 5443, 5444, 5447, 5448, 5450, 5455, 5457, 5459	5401, 5402, 5407, 5409, 5411, 5414 5415, 5417, 5419, 5421, 5424, 5426, 5428, 5432, 5433, 5436, 5437, 5439, 5441, 5443, 5444, 5447, 5448, 5450, 5455, 5457, 5459
Q	5401, 5403, 5406, 5407		
IC	5401-5407	5401	5401
F	5402, 5403		
X	5401		
L	5401	5401	5401
D	5401-5404		

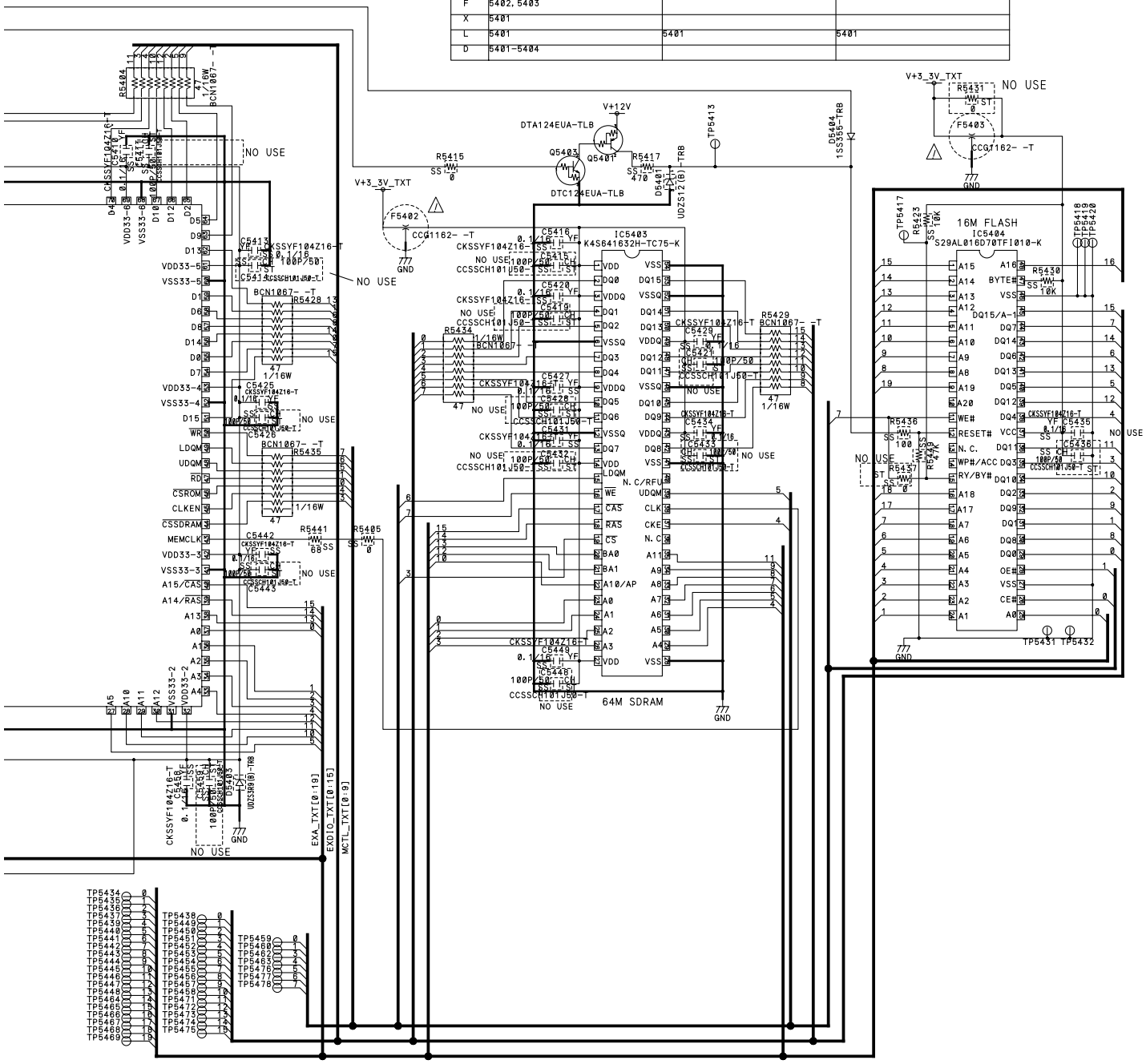

3.10 MR MAIN ASSY (9/15)

MR MAIN ASSY (9/15)

• VDEC BLOCK

NO USE : STANDBY

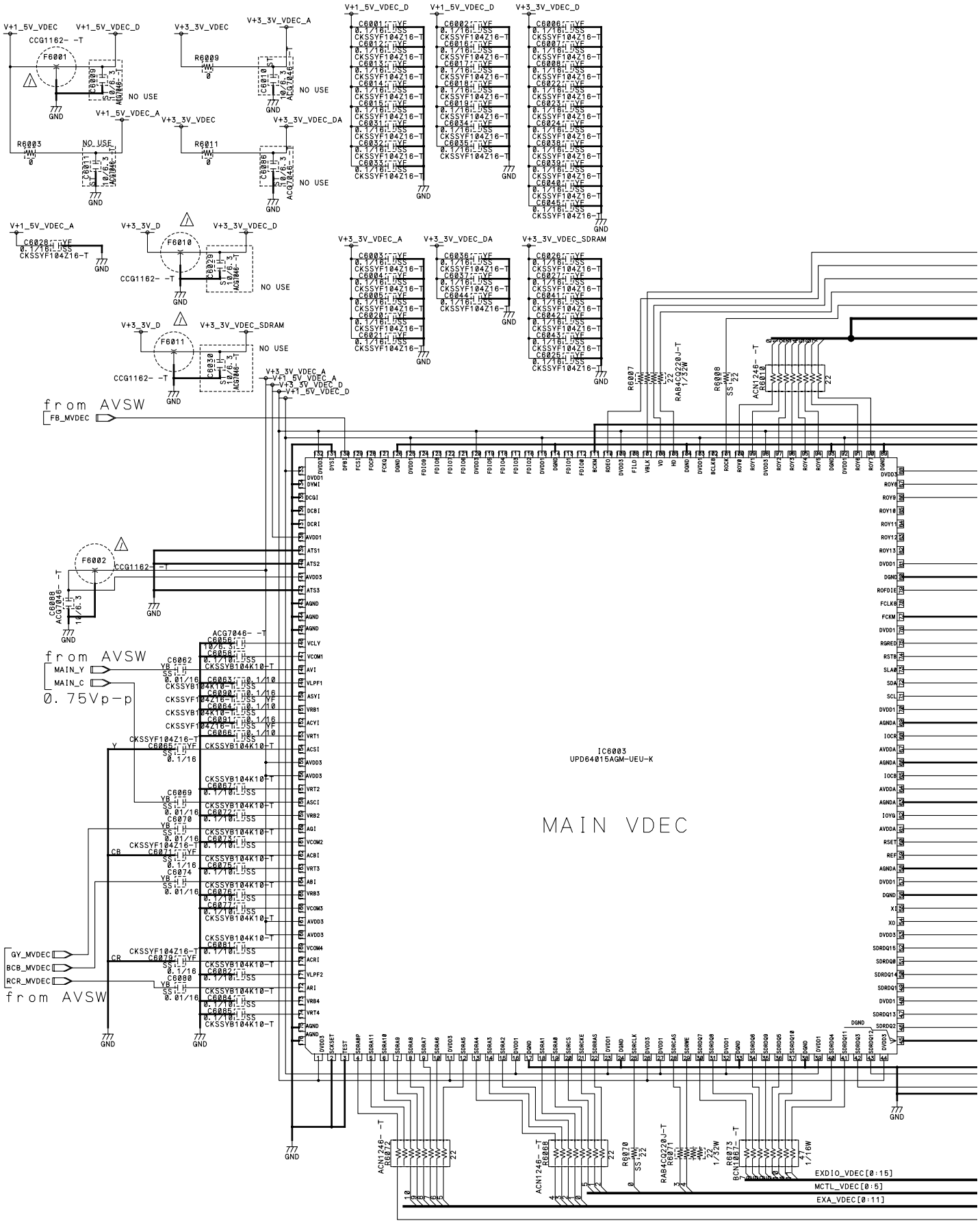

MODEL		PDP-R06XE	PDP-R06FE
ITEM	USED	AWV2219- (XE) VACANT	AWV2221- (FE) VACANT
R	6002, 6003, 6007-6012, 6015, 6020-6023, 6030, 6036-6040, 6043, 6044, 6048, 6049, 6052, 6054, 6057, 6058, 6061-6063, 6065, 6068, 6070-6073, 6076-6081, 6086	6002, 6076-6080	6002, 6020-6023, 6040, 6043, 6044, 6048, 6062, 6076-6079, 6080
C	6001-6091	6009-6011, 6029, 6030, 6057, 6086, 6087, 6089	6009-6011, 6029, 6030, 6047-6055, 6057, 6059-6061, 6086, 6087, 6089
Q	6001, 6002	6001	6001, 6002
IC	6001-6003		6001
F	6001, 6002, 6008-6011, 6022		6008, 6009, 6022
X	6001, 6002		6001
L			

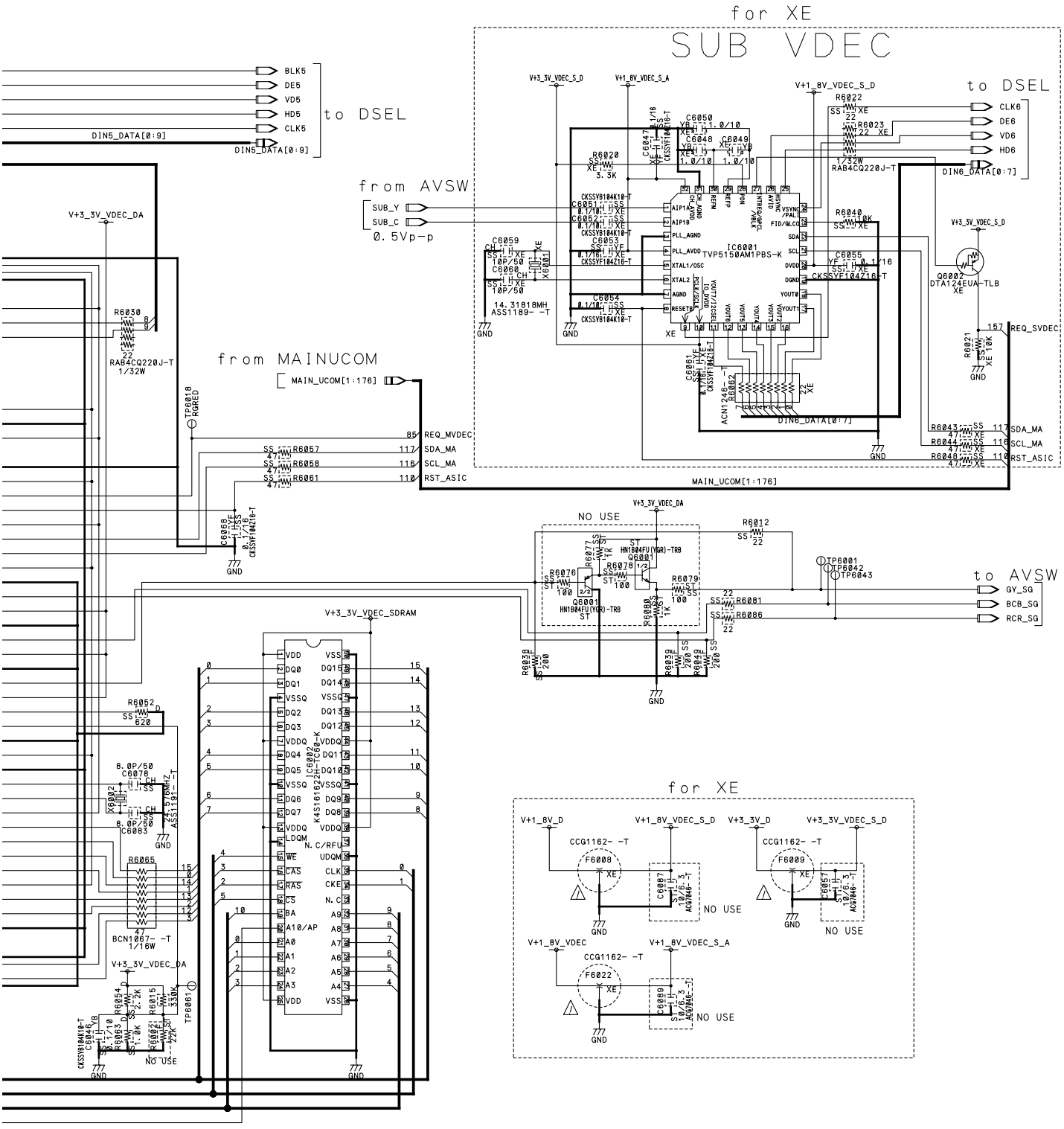

3.11 MR MAIN ASSY (10/15)

MR MAIN ASSY (10/15)

• ADC BLOCK

NO USE : STANDBY

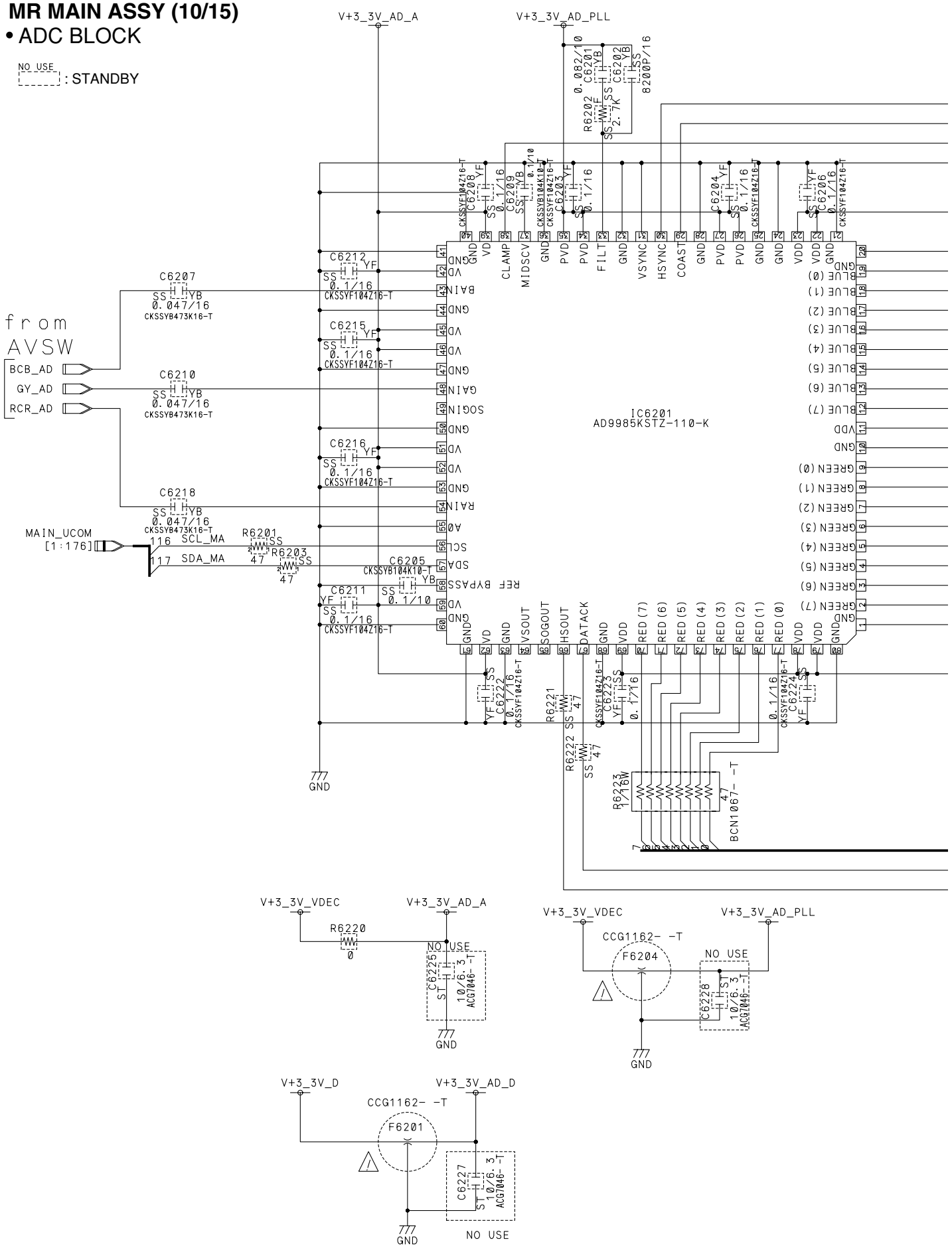

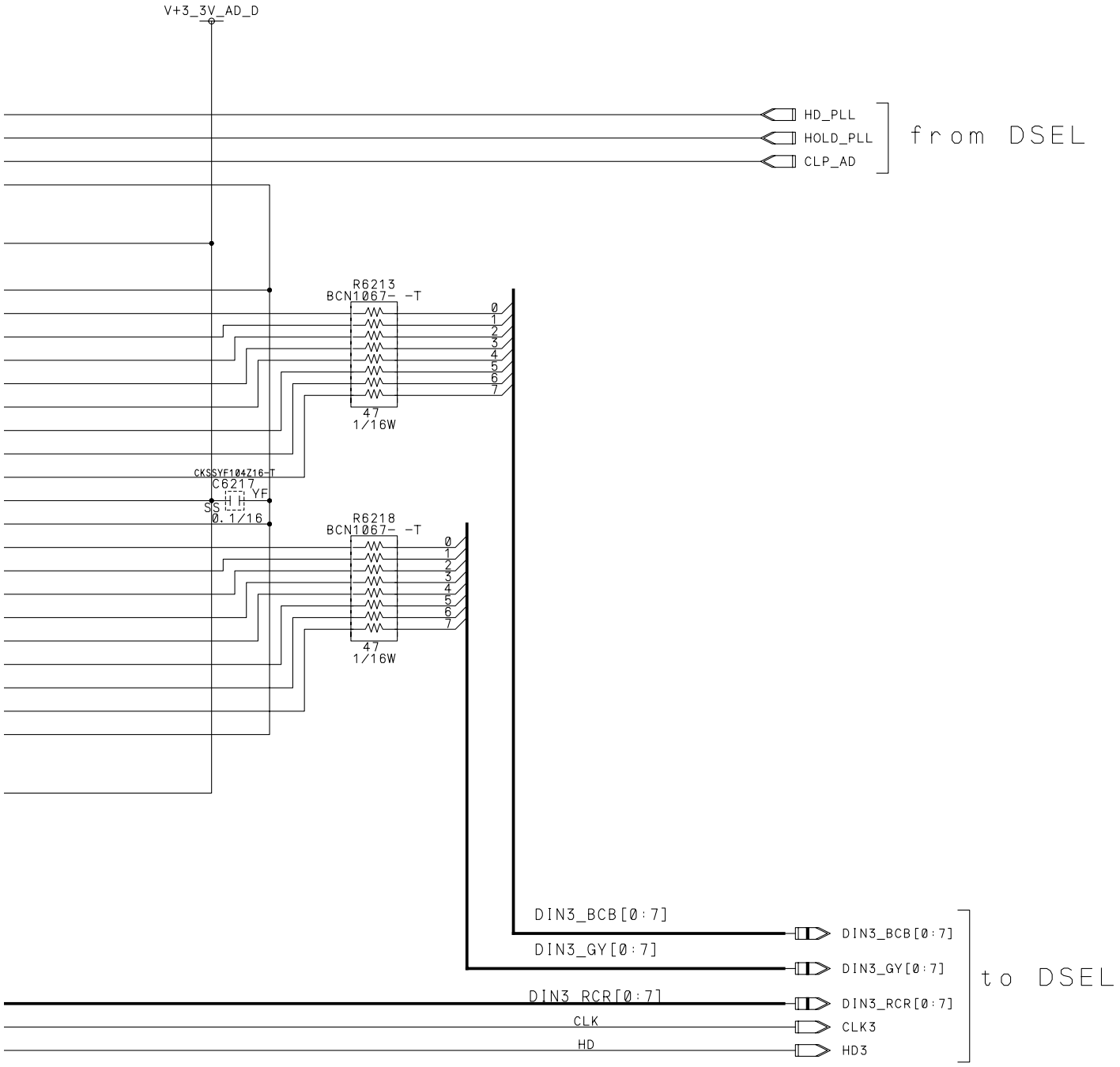

MODEL		PDP-R06XE	PDP-R06FE
ITEM	USED	AWV2219- (XE) VACANT	AWV2221- (FE) VACANT
R	6201-6203, 6213, 6218, 6220-6223		
C	6201-6212, 6215-6218, 6222-6225, 6227, 6228	6225, 6227, 6228	6225, 6227, 6228
Q			
IC	6201		
F	6201, 6204		
X			
L			

3.12 MR MAIN ASSY (11/15)

MR MAIN ASSY (11/15)

• HDMI BLOCK

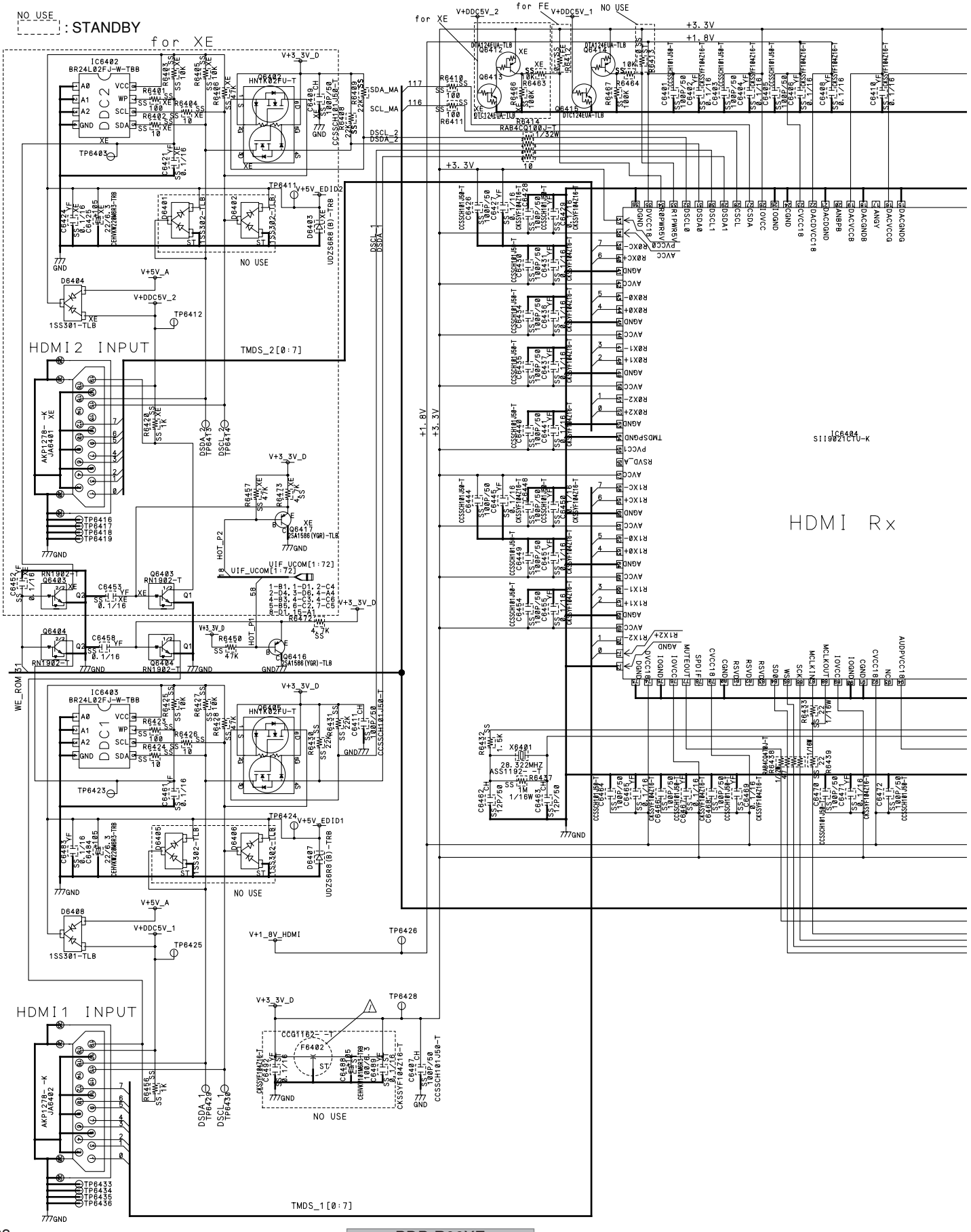

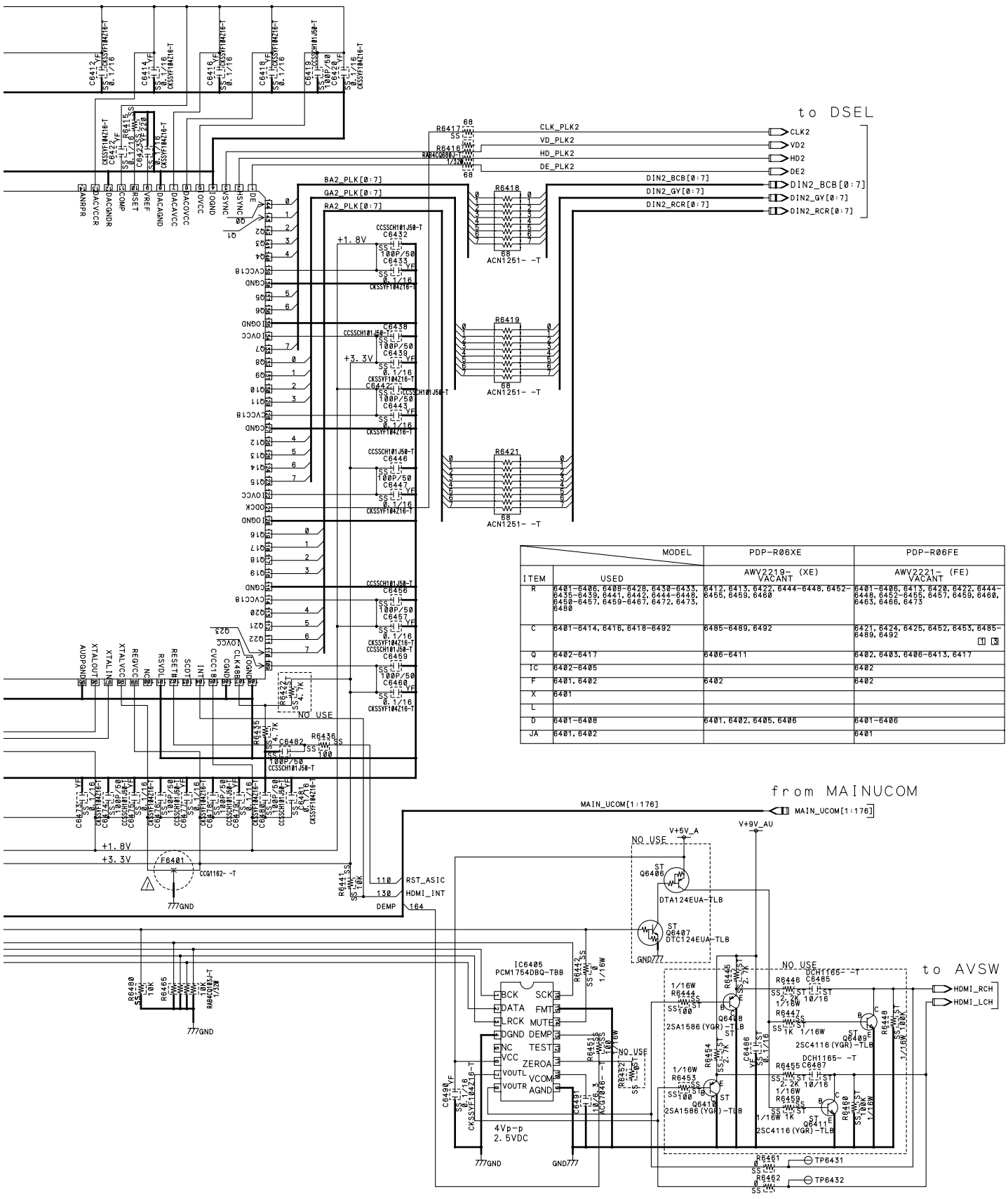

ITEM	MODEL / USED	PDP-R06XE AWV2219- (XE) VACANT	PDP-R06FE AWV2221- (FE) VACANT
R	6401-6406, 6408-6428, 6430-6433, 6435-6439, 6441, 6442, 6444-6448, 6450-6457, 6459-6467, 6472, 6473, 6480	6412, 6413, 6422, 6444-6448, 6452-6455, 6459, 6460	6401-6406, 6413, 6420, 6422, 6444-6448, 6452-6455, 6457, 6459, 6460, 6463, 6466, 6473
C	6401-6414, 6416, 6418-6492	6485-6489, 6492	6421, 6424, 6425, 6452, 6453, 6485-6489, 6492 [1] [3]
Q	6402-6417	6406-6411	6402, 6403, 6406-6413, 6417
IC	6402-6405		6402
F	6401, 6402	6402	6402
X	6401		
L			
D	6401-6408	6401, 6402, 6405, 6406	6401-6406
JA	6401, 6402		6401

3.13 MR MAIN ASSY (12/15)

MR MAIN ASSY (12/15)

• DSEL BLOCK

NO USE : STANDBY

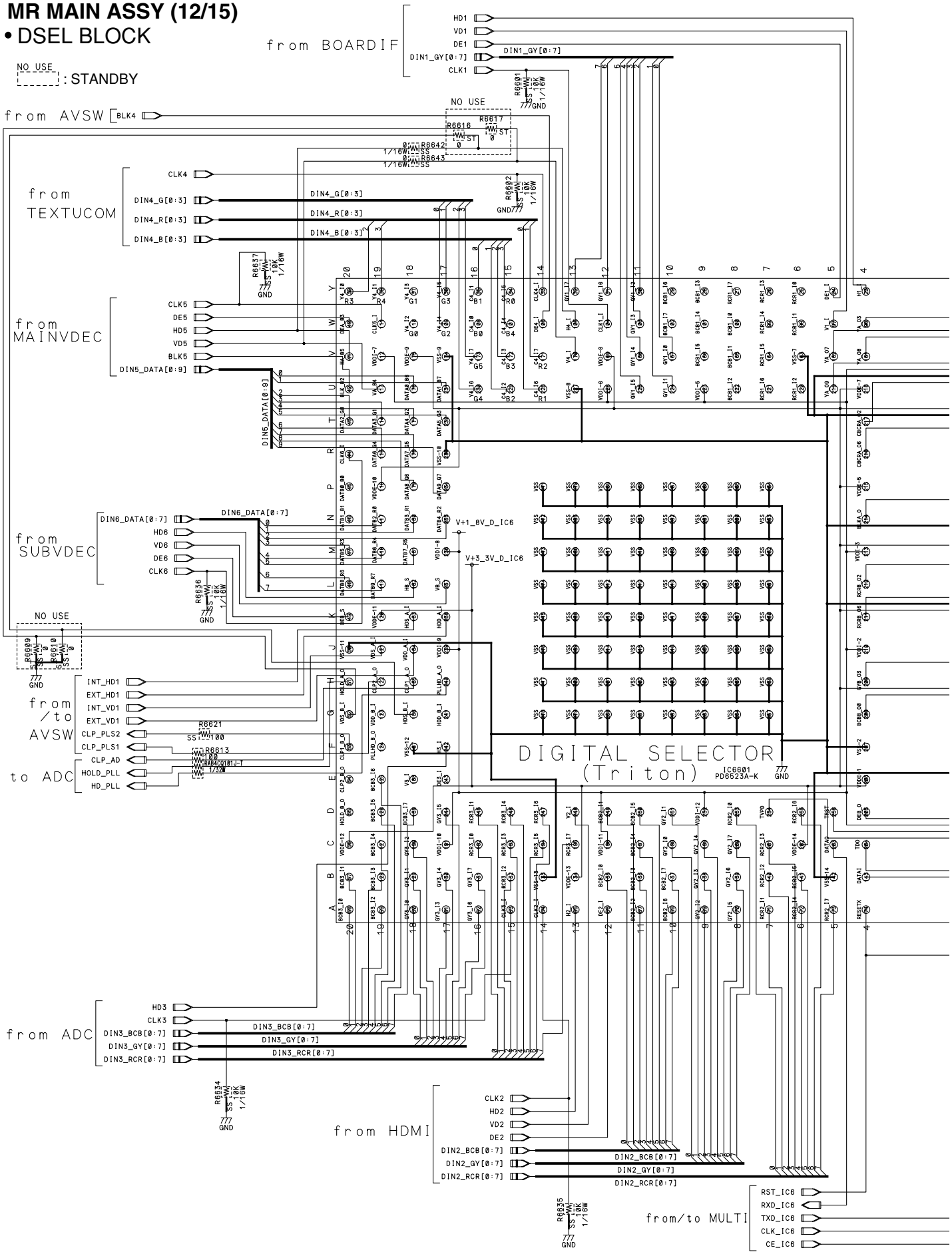

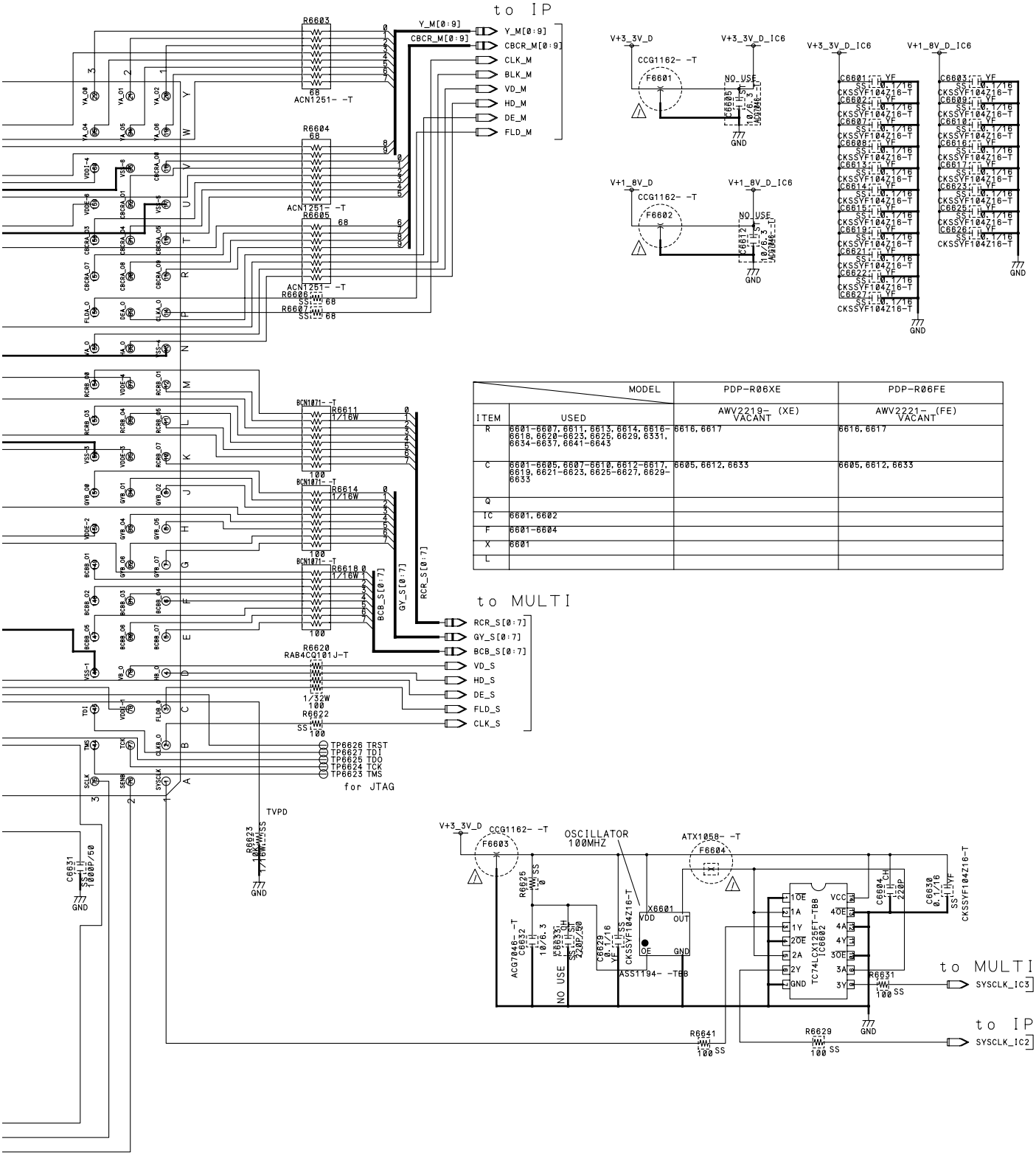

ITEM	MODEL / USED	PDP-R06XE AWV2219- (XE) VACANT	PDP-R06FE AWV2221- (FE) VACANT
R	6601-6607, 6611, 6613, 6614, 6616-6618, 6620-6623, 6625, 6629, 6331, 6634-6637, 6641-6643	6616, 6617	6616, 6617
C	6601-6605, 6607-6610, 6612-6617, 6619, 6621-6623, 6625-6627, 6629-6633	6605, 6612, 6633	6605, 6612, 6633
Q			
IC	6601, 6602		
F	6601-6604		
X	6601		
L			

3.14 MR MAIN ASSY (13/15)

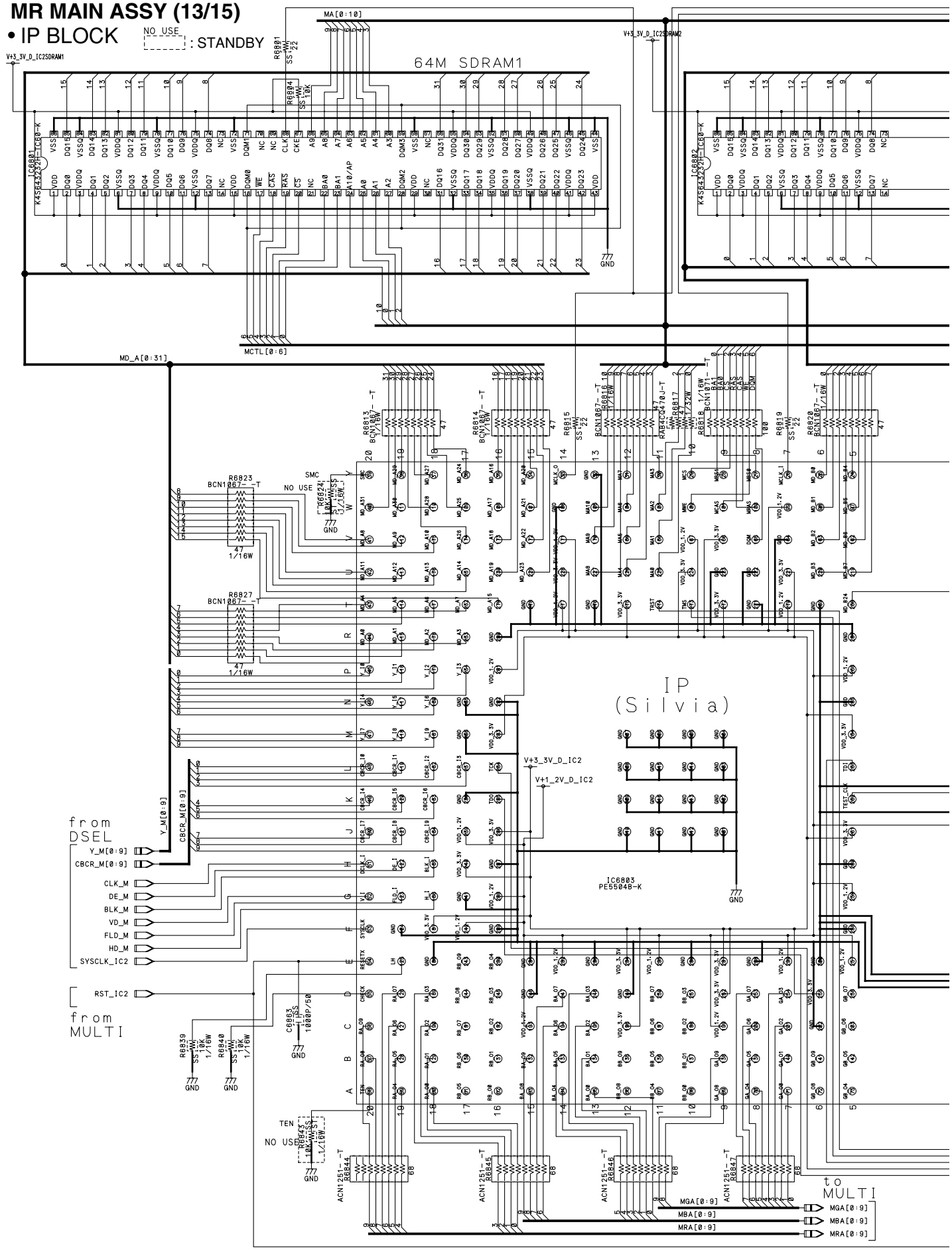

ITEM	USED	MODEL: PDP-R06XE AWV2219- (XE) VACANT	PDP-R06FE AWV2221- (FE) VACANT
R	6801, 6804, 6805, 6811, 6813-6821, 6823-6825, 6827, 6828, 6831-6841, 6845-6849	6811, 6824, 6843, 6848	6811, 6824, 6843, 6848
C	6801, 6802, 6804, 6807-6810, 6813, 6815-6817, 6821, 6823-6829, 6830-6832, 6834, 6835, 6839-6863	6810, 6823, 6832	6810, 6823, 6832
Q			
IC	6801-6803		
F			
X			
L	6801-6804		

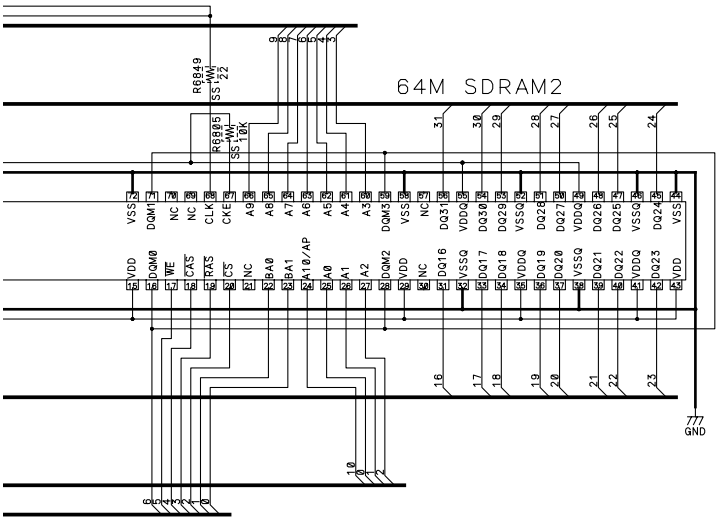

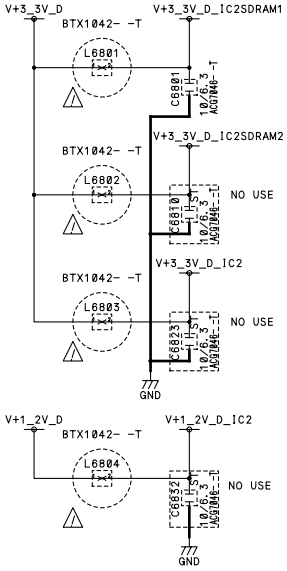

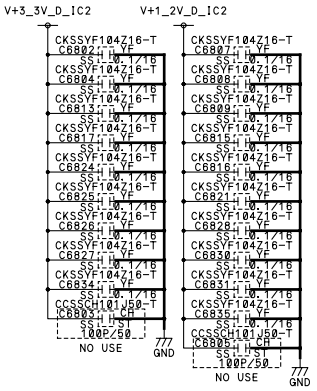

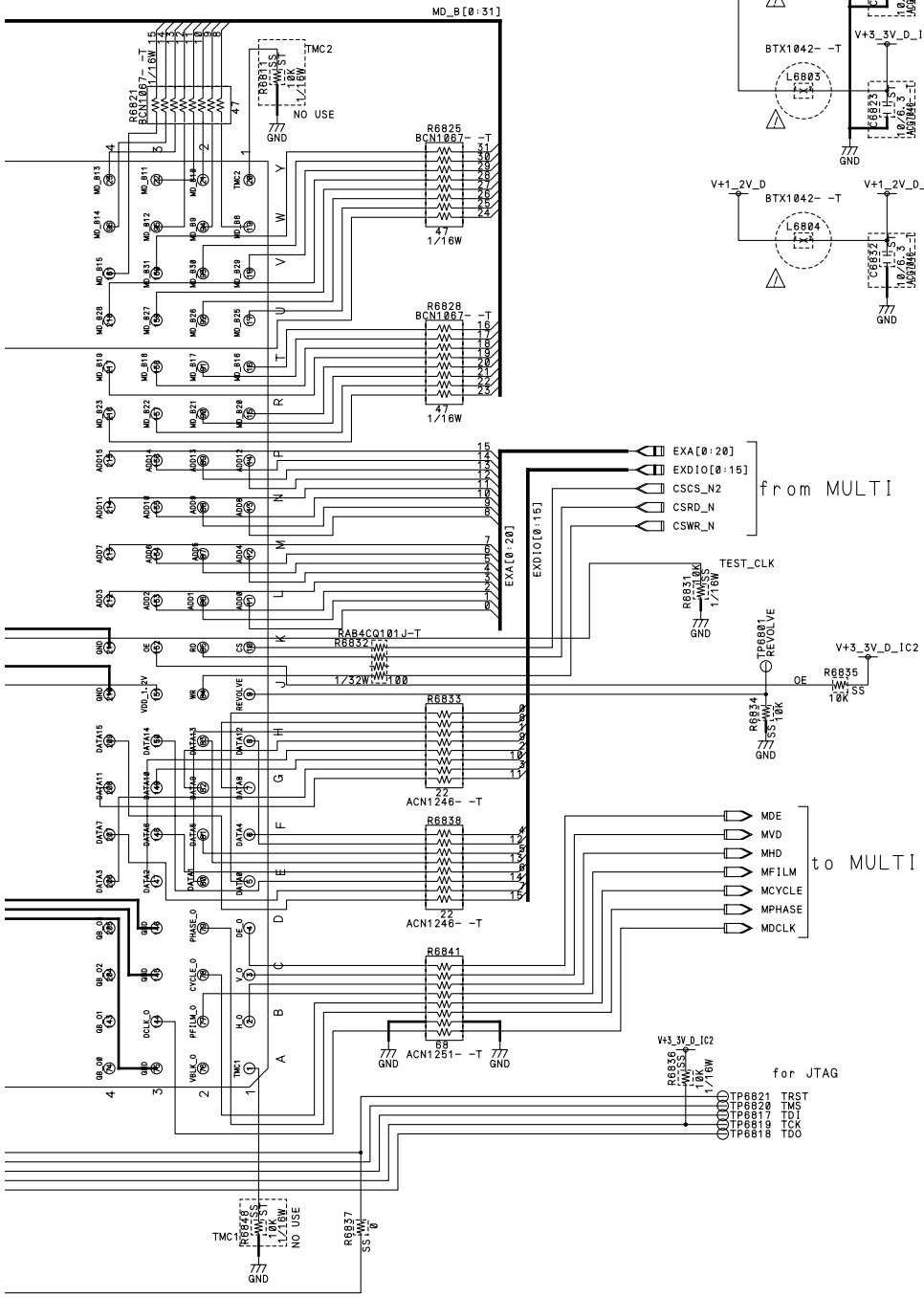

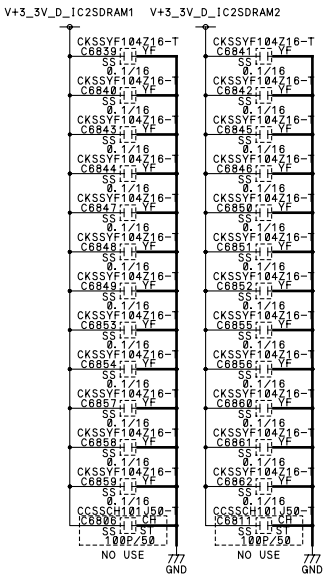

MR MAIN ASSY (14/15)

• MULTI BLOCK

NO USE
: STANDBY

ITEM	MODEL / USED	PDP-R06XE AWV2219-_-(XE) VACANT	PDP-R06FE AWV2221-_-(FE) VACANT
R	7001–7009, 7011, 7013–7018, 7020–7024, 7026, 7029–7033, 7036, 7037, 7041, 7044–7047, 7053, 7055, 7057, 7060–7064, 7067, 7070, 7076, 7077, 7080, 7081, 7084, 7099–7101	7005, 7006, 7037, 7044–7047, 7053, 7055, 7057, 7099, 7101	7005, 7006, 7037, 7044–7047, 7053, 7055, 7057, 7099, 7101
C	7001–7006, 7008, 7010–7017, 7019, 7021–7024, 7026–7029, 7032–7037, 7039–7042, 7044, 7046–7048, 7050–7053	7001–7005, 7022, 7035, 7051	7001–7005, 7022, 7035, 7051
Q			
IC	7001–7004	7003	7003
F	7001–7006		
X			
L			
CN	7001	7001	7001

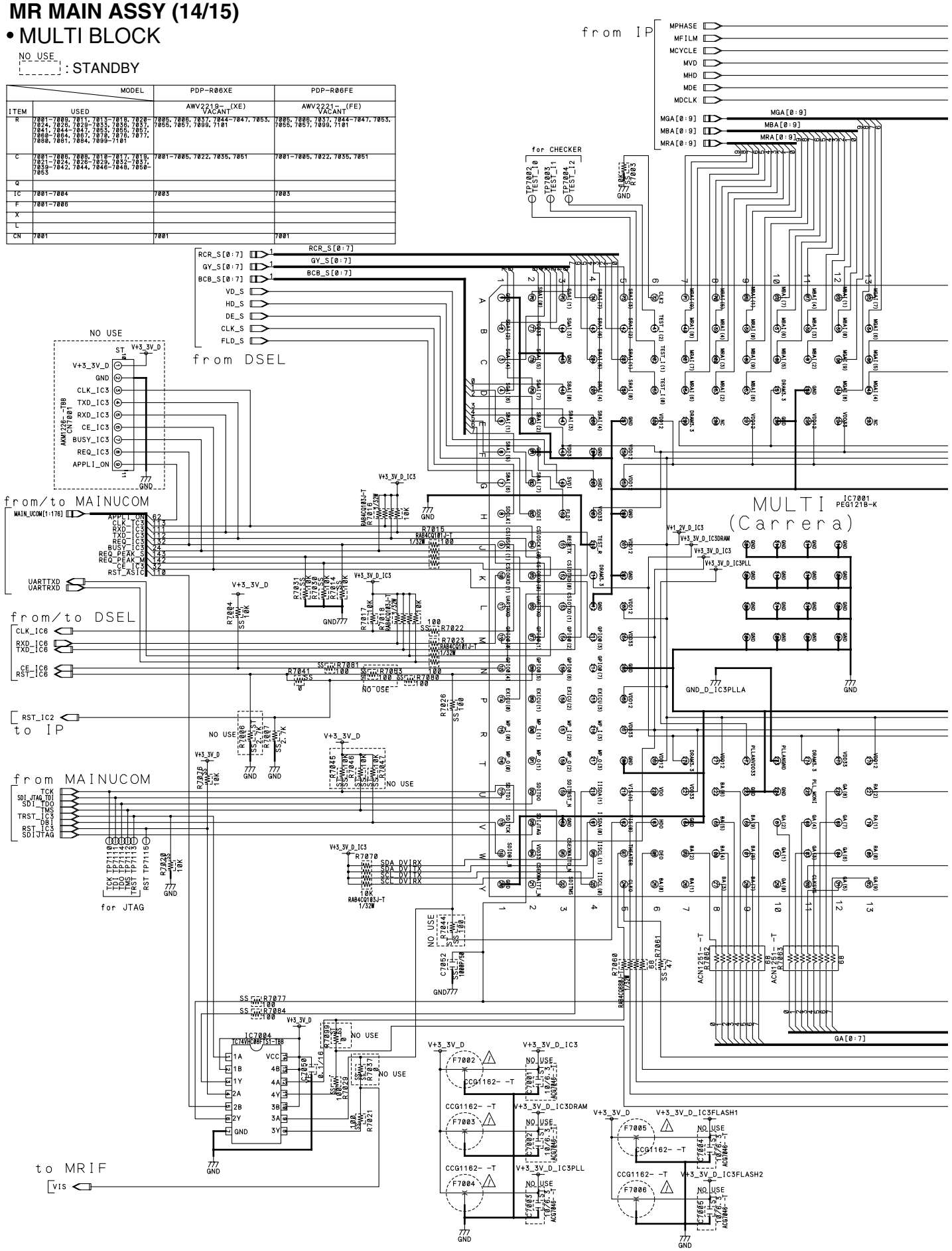

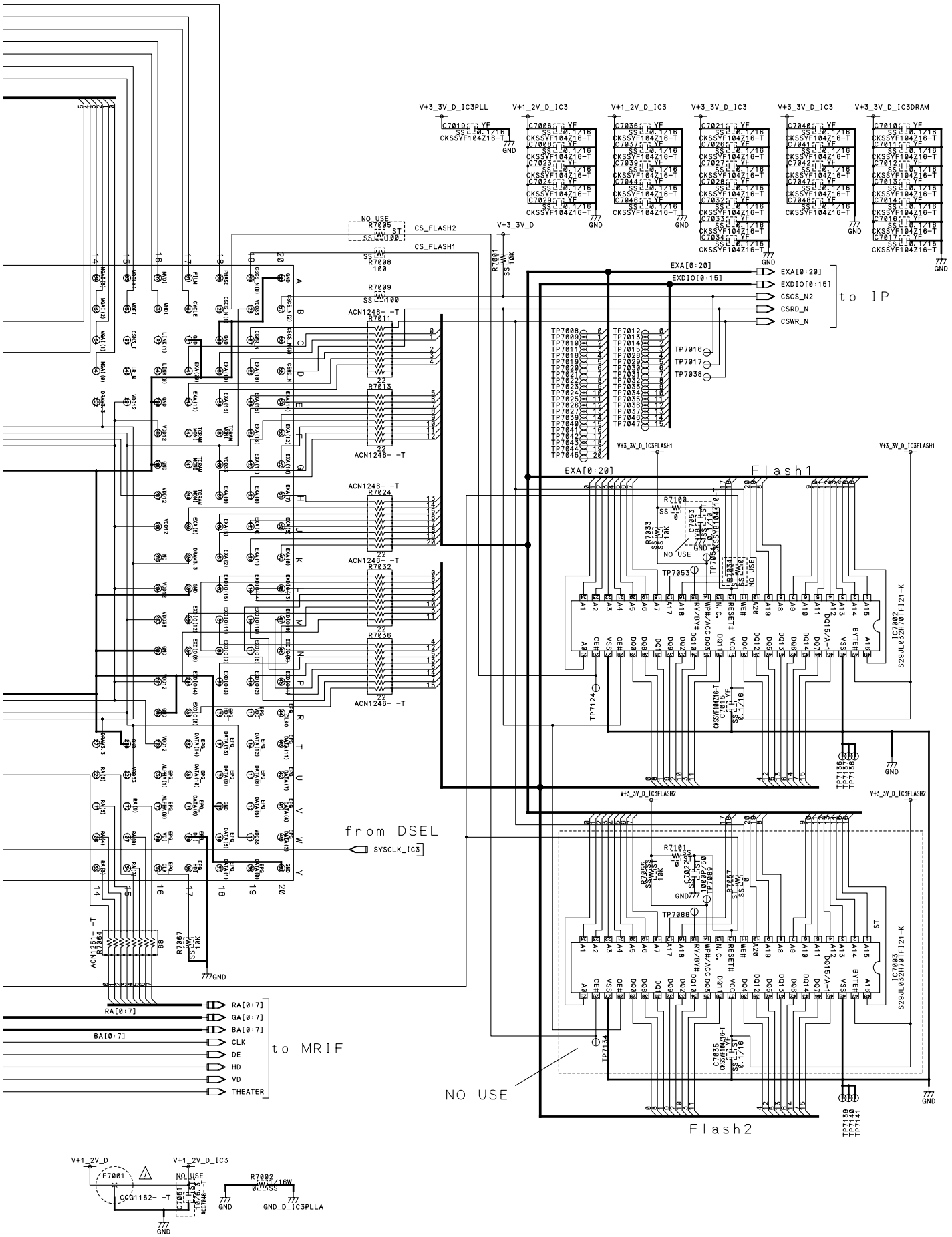
V+3_3V_D_IC3PLL
V+1_2V_D_IC3
V+3_3V_D_IC3
V+3_3V_D_IC3DRAM
V+3_3V_D
CS_FLASH2
CS_FLASH1
NO USE
EXA[0:20]
EXDIO[0:15]
CSCS_N2
CSRD_N
CSWR_N
to IP
Flash1
Flash2
V+3_3V_D_IC3FLASH1
V+3_3V_D_IC3FLASH2
from DSEL
SYSCLK_IC3
RA[0:7]
GA[0:7]
BA[0:7]
CLK
DE
HD
VD
THEATER
to MRIF
NO USE
GND
GND_D_IC3PLLA

3.16 MR MAIN ASSY (15/15)

MR MAIN ASSY (15/15)

• MR IF BLOCK

NO USE : STANDBY

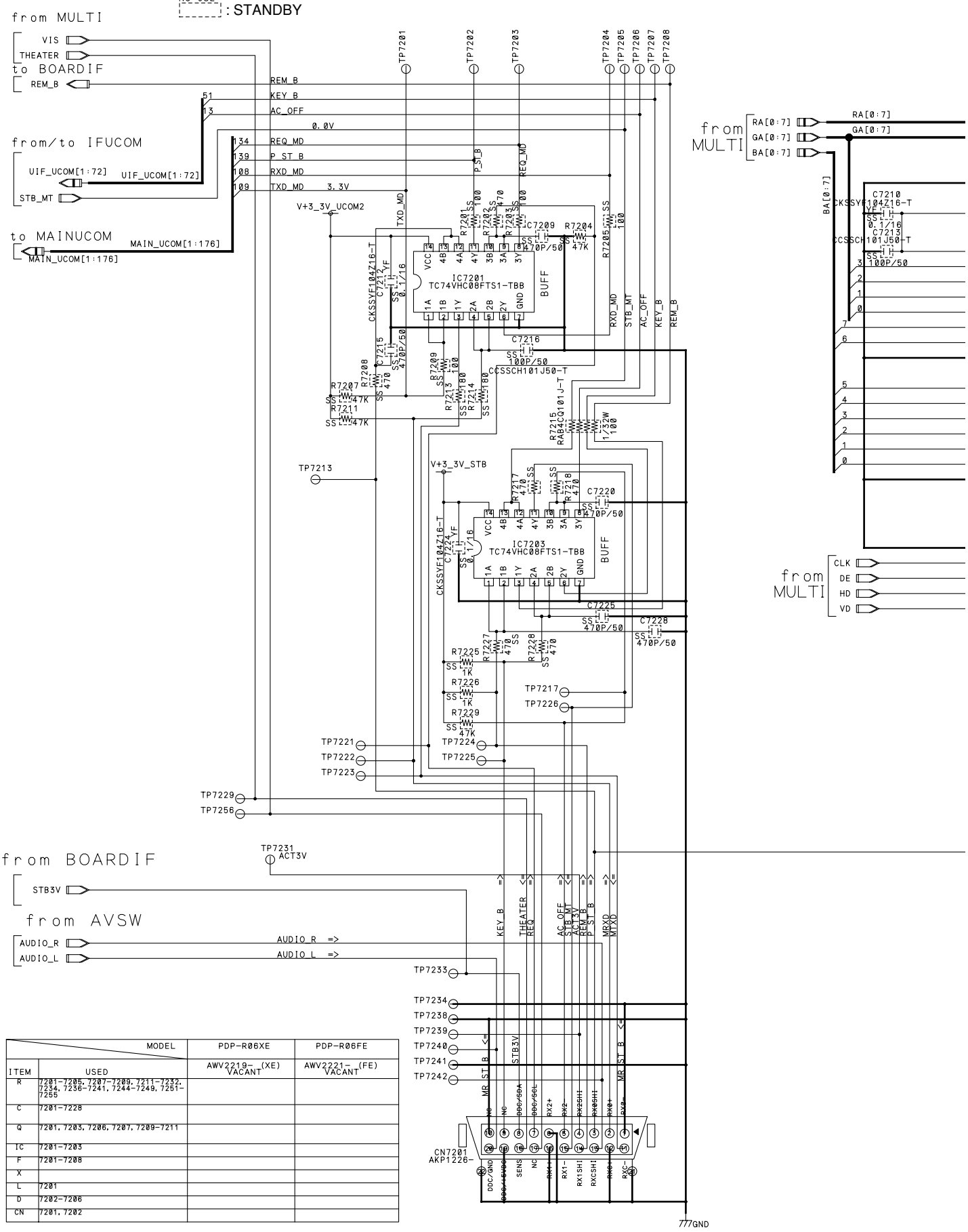

ITEM	MODEL / USED	PDP-R06XE AWV2219- (XE) VACANT	PDP-R06FE AWV2221- (FE) VACANT
R	7201-7205, 7207-7209, 7211-7232, 7234, 7236-7241, 7244-7249, 7251-7255		
C	7201-7228		
Q	7201, 7203, 7206, 7207, 7209-7211		
IC	7201-7203		
F	7201-7208		
X			
L	7201		
D	7202-7206		
CN	7201, 7202		

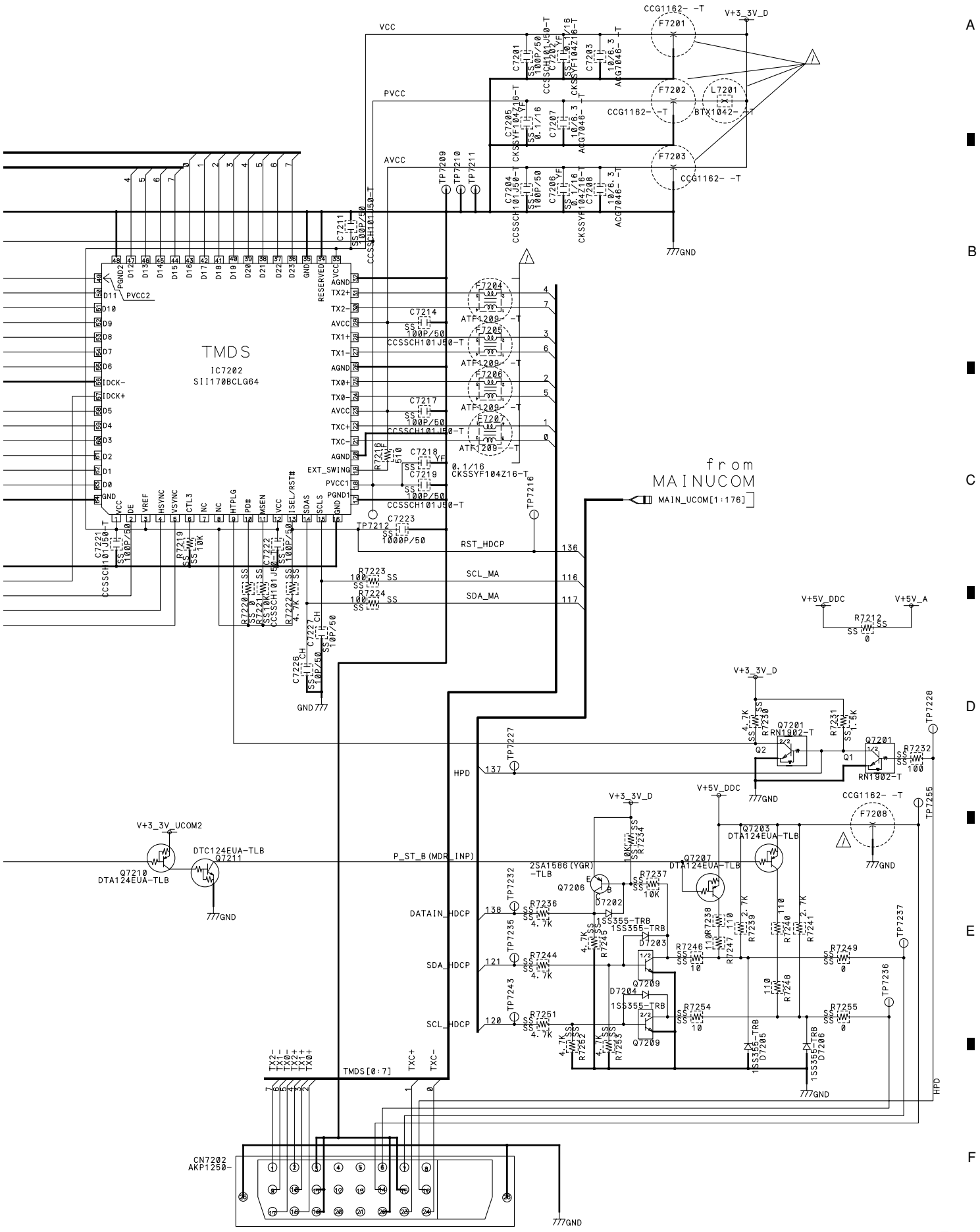
TMDS
IC7202
SII170BCLG64
from
MAINUCOM
MAIN_UCOM[1:176]
RST_HDCP
SCL_MA
SDA_MA
HPD
P_ST_B(MDR_INP)
DATAIN_HDCP
SDA_HDCP
SCL_HDCP
TMDS[0:7]
CN7202
AKP1250-
GND
V+3_3V_D
V+5V_DDC
V+5V_A
V+3_3V_UCOM2

3.17 REAR IO ASSY

REAR IO ASSY

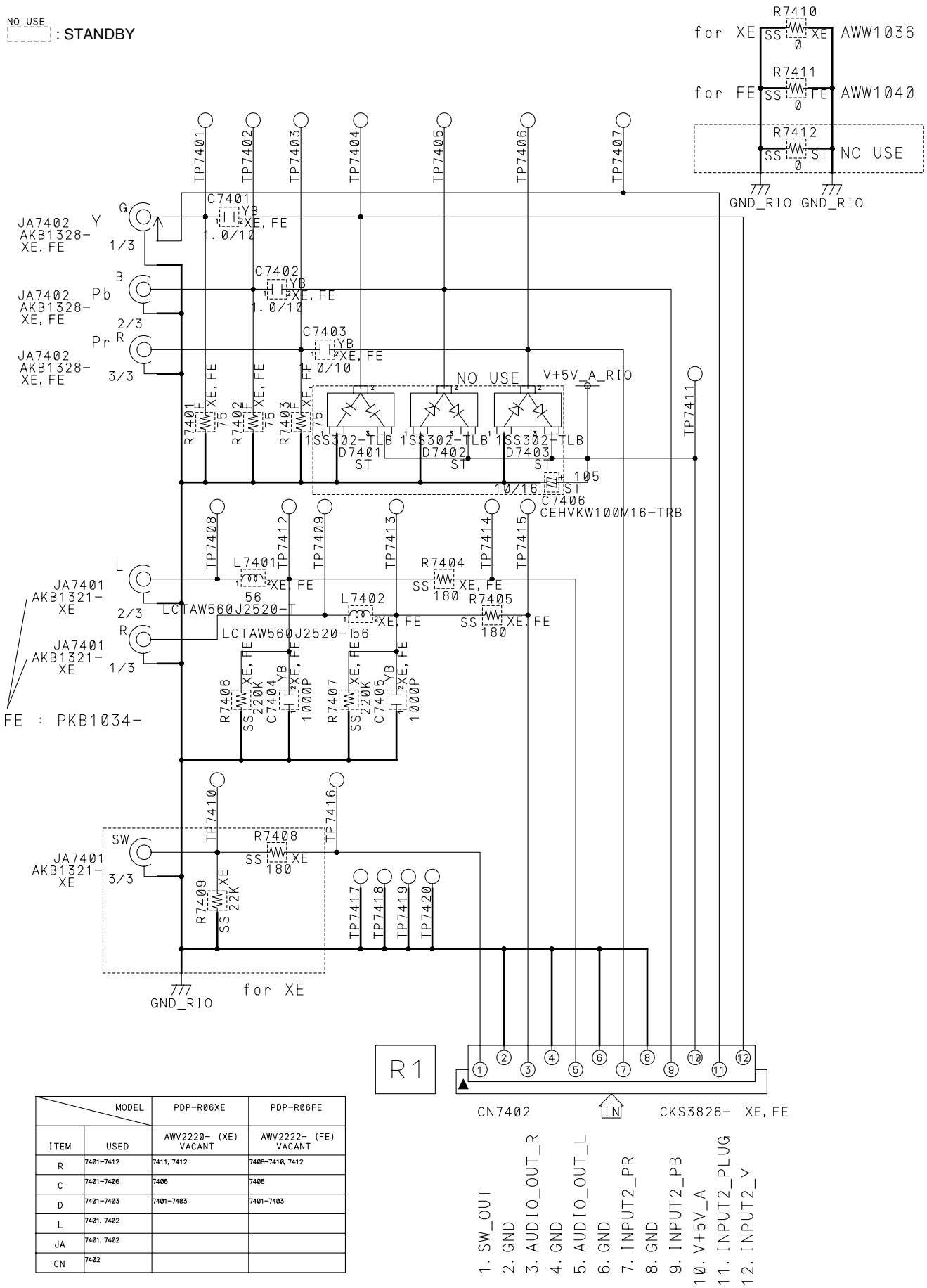

MODEL		PDP-R06XE	PDP-R06FE
ITEM	USED	AWV2220- (XE) VACANT	AWV2222- (FE) VACANT
R	7401-7412	7411, 7412	7408-7410, 7412
C	7401-7406	7406	7406
D	7401-7403	7401-7403	7401-7403
L	7401, 7402		
JA	7401, 7402		
CN	7402		

A

B

C

D

E

F

3.18 SR ASSY

SR ASSY

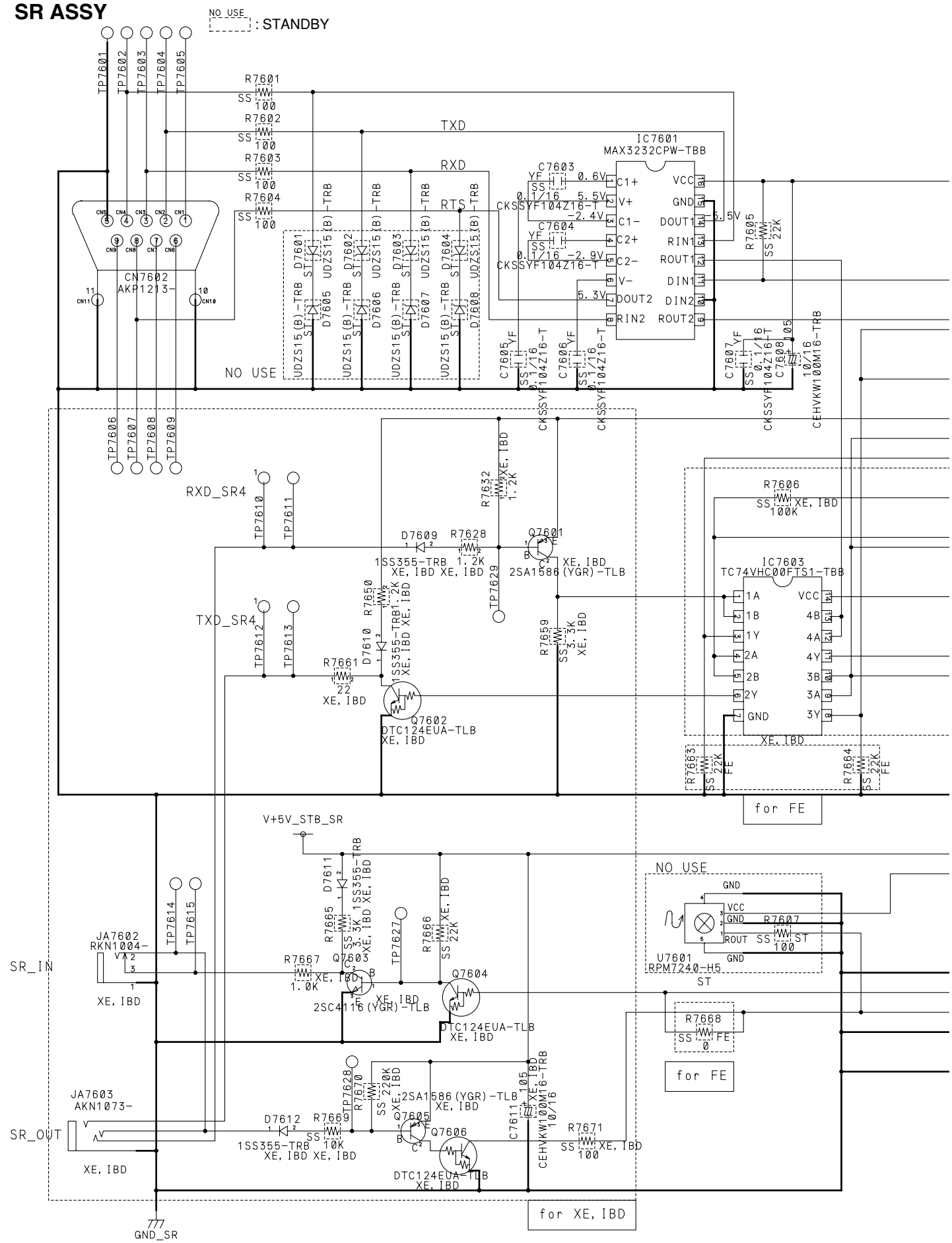

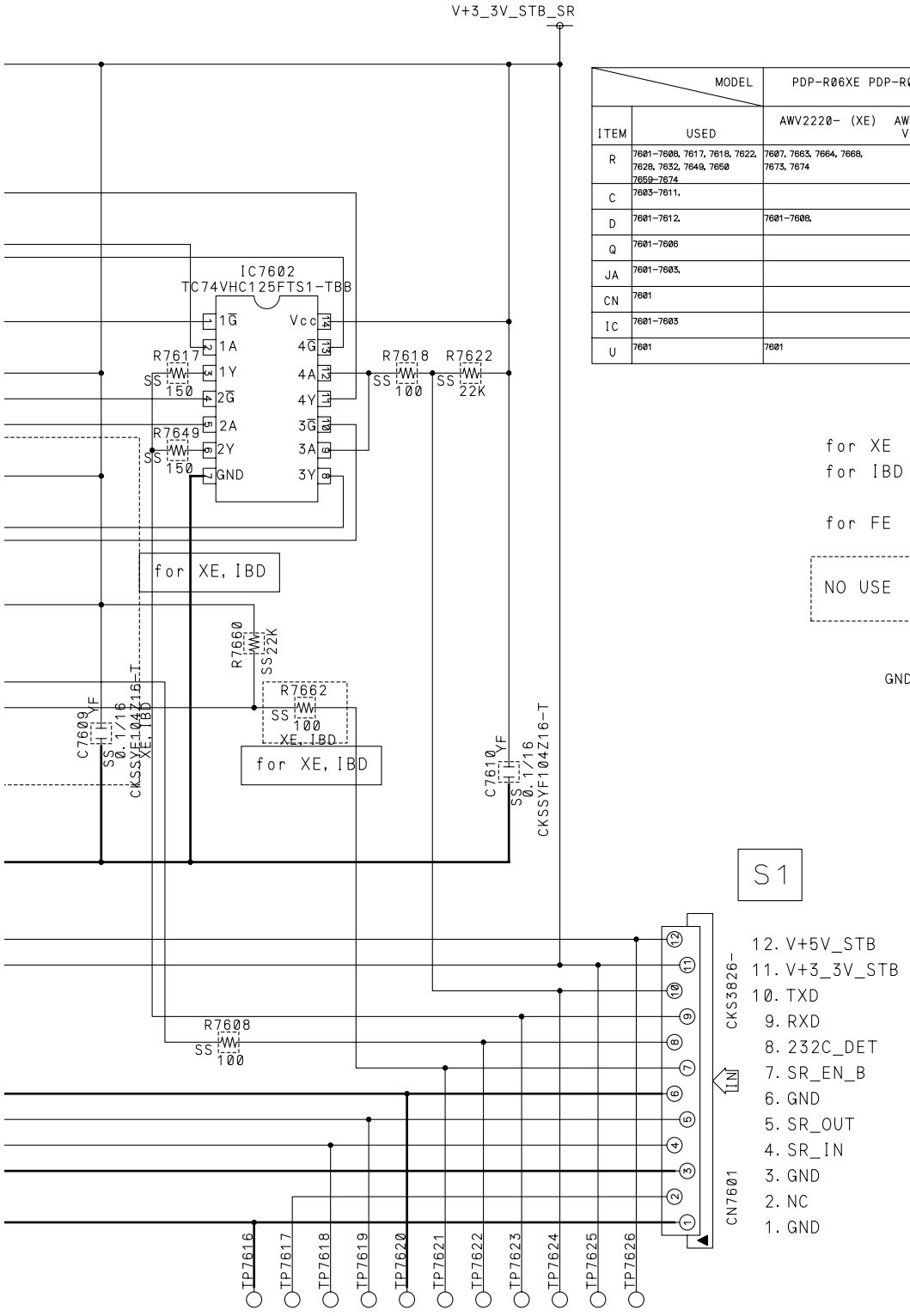

MODEL		PDP-R06XE PDP-R06G, PDP-R06C	PDP-R06FE
ITEM	USED	AWV2220- (XE) AWV2233-, AWV2234- (IBD) VACANT	AWV2222- (FE) VACANT
R	7601-7608, 7617, 7618, 7622, 7628, 7632, 7649, 7650 7659-7674	7607, 7663, 7664, 7668, 7673, 7674	7606, 7607, 7628, 7632, 7650 7659, 7661, 7662, 7665-7667 7669-7672, 7674
C	7603-7611,		7609, 7611
D	7601-7612,	7601-7608,	7601-7611,
Q	7601-7606		7601-7606
JA	7601-7603,		7602, 7603,
CN	7601		
IC	7601-7603		7603
U	7601	7601	7601

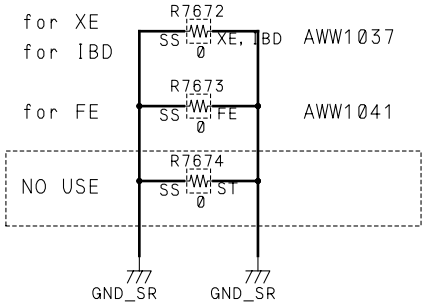

3.19 FRONT ASSY

FRONT ASSY

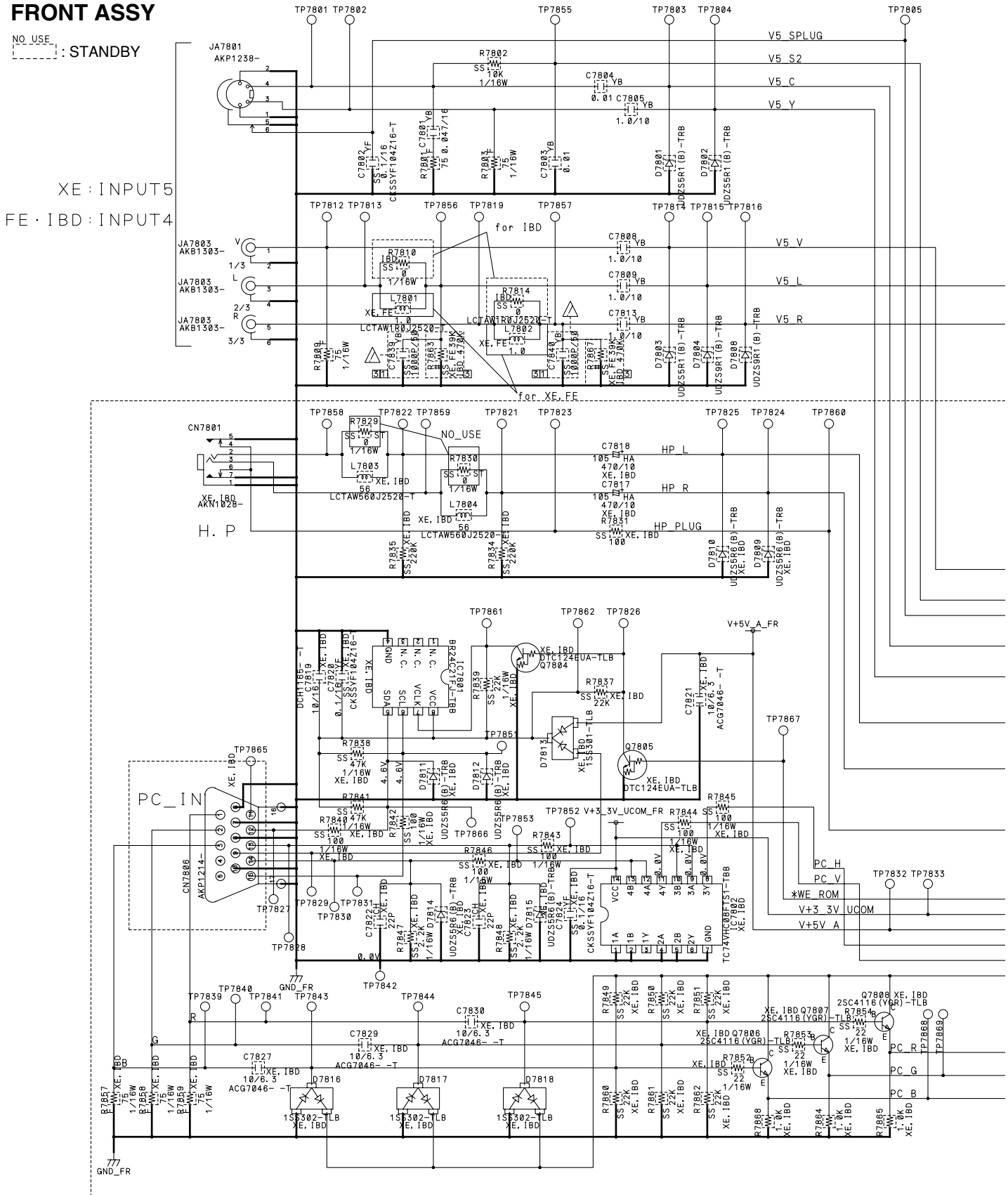

MODEL		PDP-R06XE	PDP-R06FE	PDP-R06G, PDP-R06C
ITEM	USED	AWV2220- (XE) VACANT	AWV2222- (FE) VACANT	AWV2233- AWV2234- (IBD) VACANT
R	7801-7803, 7809, 7810, 7814 7827-7832, 7834, 7835, 7837-7870	7810, 7814, 7828-7830, 7832, 7869, 7870	7810, 7814, 7827 7829-7832, 7834, 7835, 7837-7868	7827-7830, 7869, 7870
C	7801-7805, 7808, 7809, 7813, 7817-7824, 7827, 7829-7832, 7834-7848	7836-7838	7817-7824, 7827, 7829-7832, 7834, 7835	7836-7838
D	7801-7804, 7808-7818		7810-7818	
Q	7804-7808		7804-7808	
JA	7801, 7803, 7804		7804	
CN	7801, 7803-7805	7805	7801, 7805	7805
IC	7801, 7802		7801, 7802	
L	7801-7804		7803, 7804	7801, 7802

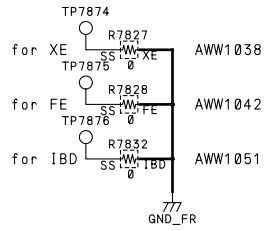

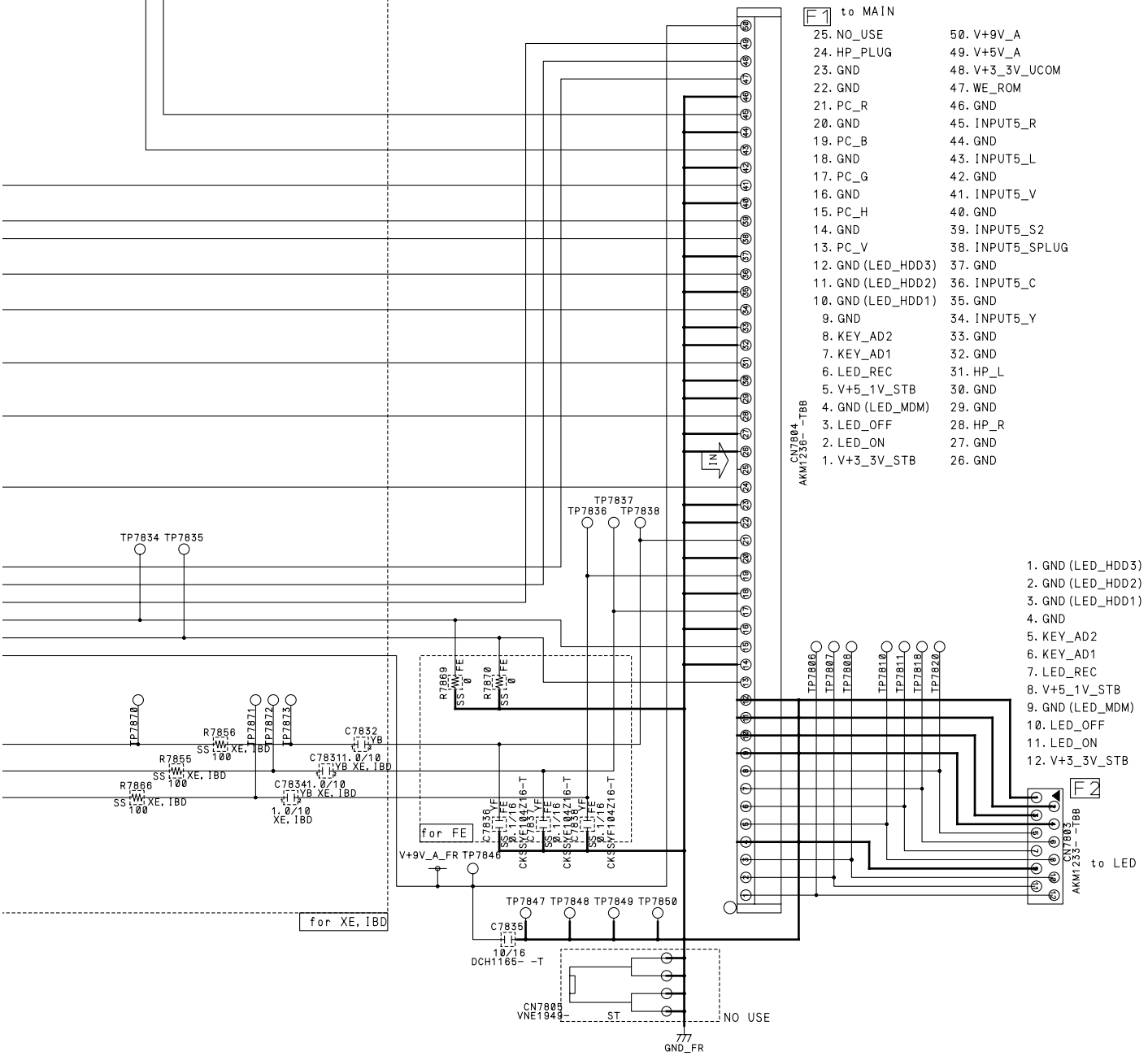

3.20 LED ASSY

LED ASSY

NO USE : STANDBY

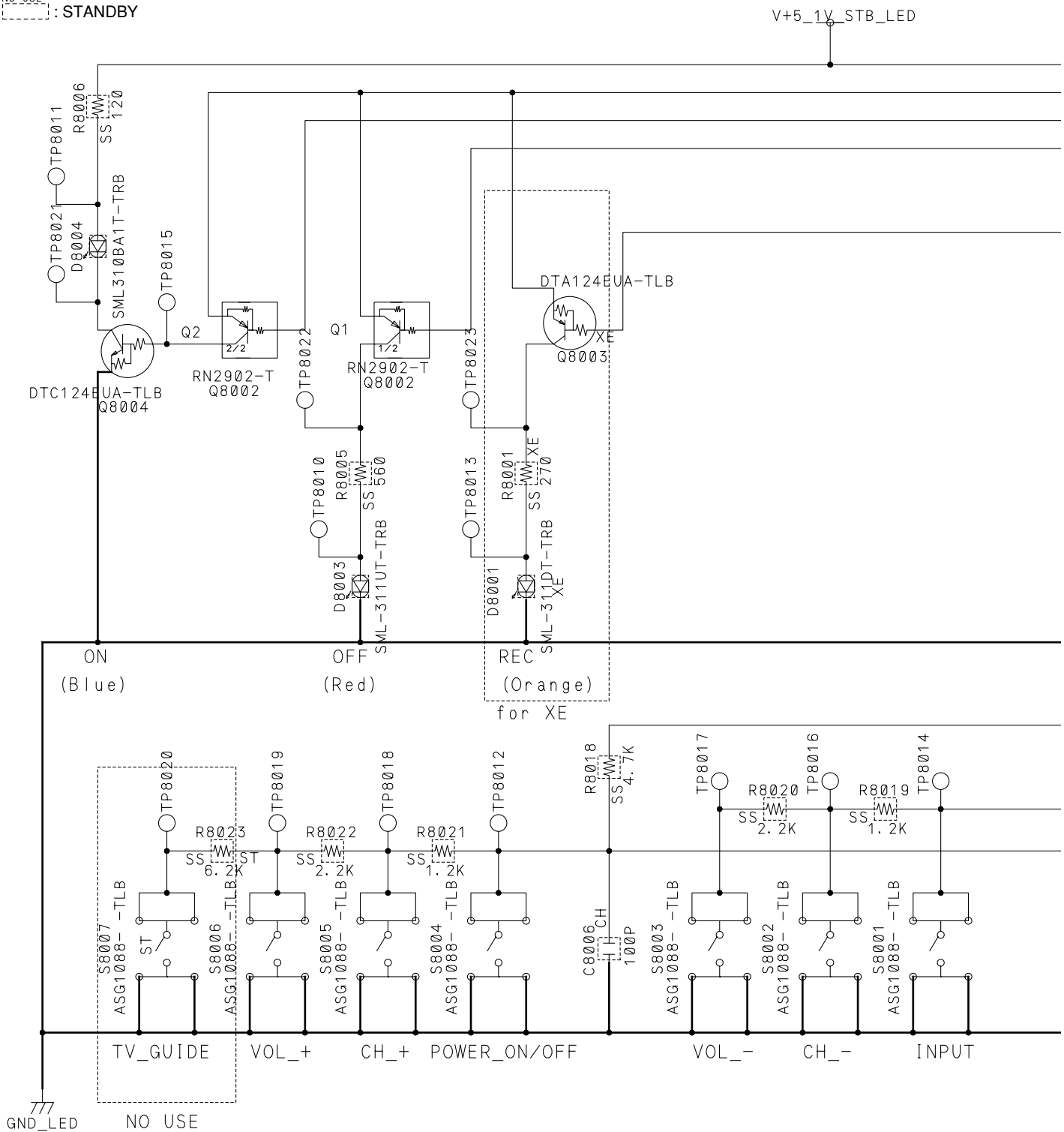

KEY_AD1 voltage

Pushed KEY	Typ.	Thr.
NO USE	3.30	2.51
----	----	1.70
VOL_-	1.39	0.99
CH_-	0.67	0.38
INPUT	0	

[V]

KEY_AD2 voltage

Pushed KEY	Typ.	Thr.
NO USE	3.30	2.51
TV_GUIDE	2.21	1.70
VOL_+	1.39	0.99
CH_+	0.67	0.38
POWER_ON/OFF	0	

[V]

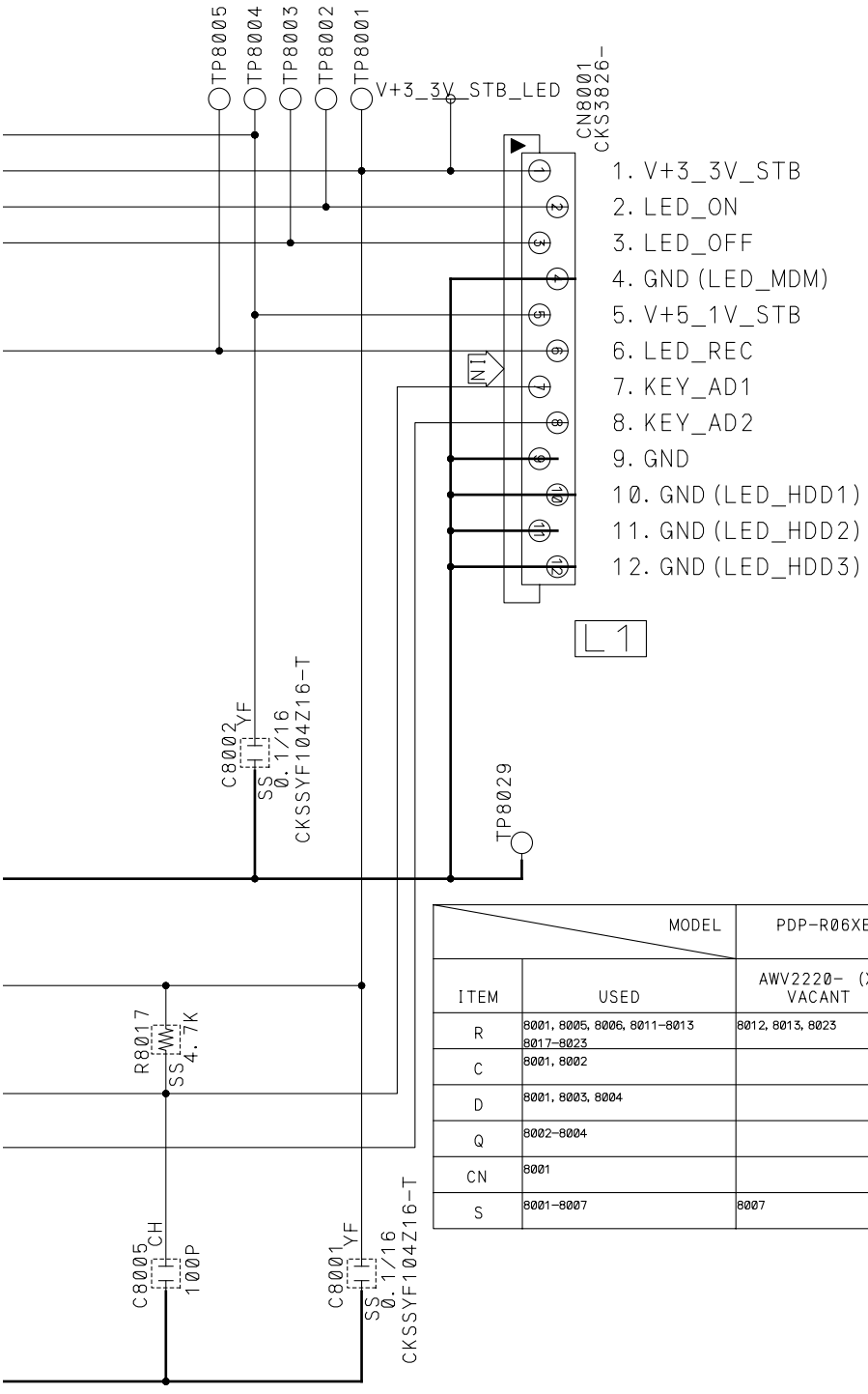

MODEL		PDP-R06XE	PDP-R06FE PDP-R06G, PDP-R06C
ITEM	USED	AWV2220- (XE) VACANT	AWV2222- (FE) AWV2233- AWV2234- (IBD) VACANT
R	8001, 8005, 8006, 8011-8013 8017-8023	8012, 8013, 8023	8001, 8011, 8013, 8023
C	8001, 8002		
D	8001, 8003, 8004		8001
Q	8002-8004		8003
CN	8001		
S	8001-8007	8007	8007

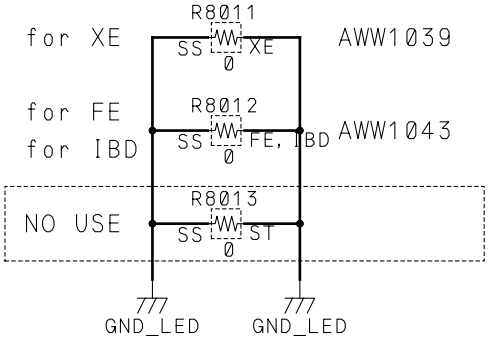

R06 D-TUNER ASSY (1/6)

• TUNER BLOCK

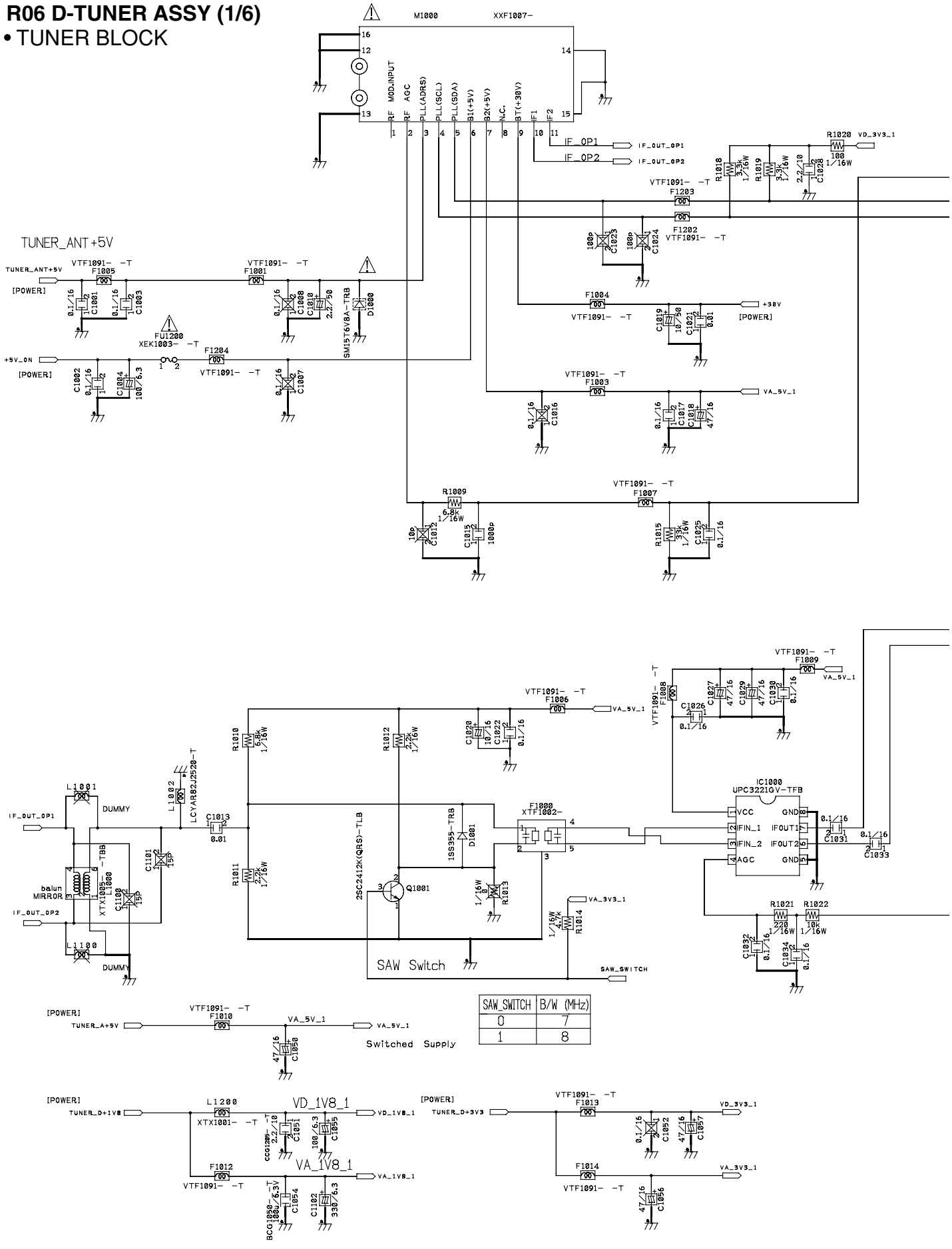

SAW_SWITCH	B/W (MHz)
0	7
1	8

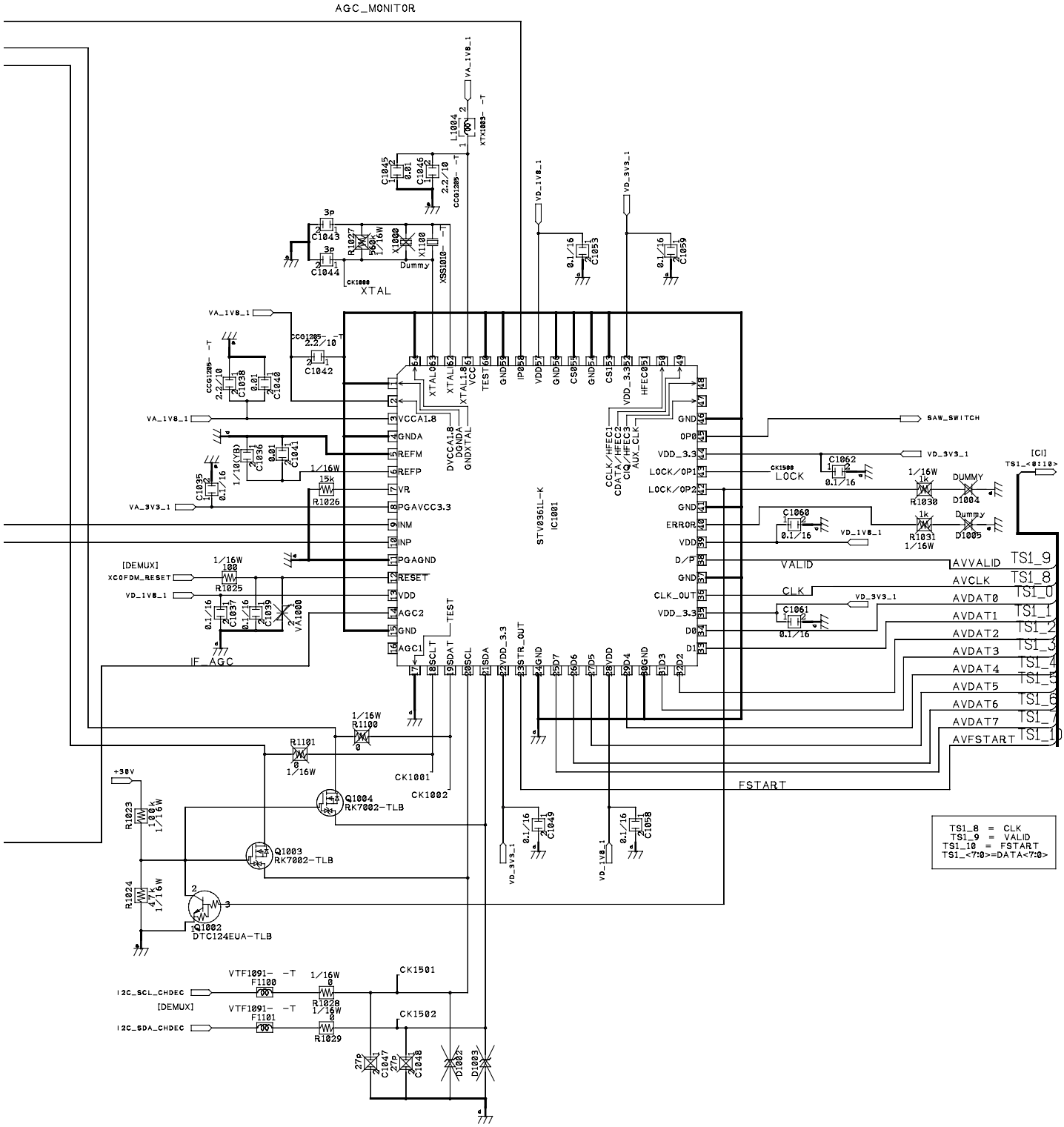
AGC_MONITOR
XTAL
STV0361L-K
IC1001
LOCK
VALID
CLK
AVVALID
AVCLK
AVDAT0
AVDAT1
AVDAT2
AVDAT3
AVDAT4
AVDAT5
AVDAT6
AVDAT7
AVFSTART
FSTART
SAW_SWITCH
IF_AGC
[DEMUX]
XC0FDM_RESET
I2C_SCL_CHDEC
I2C_SDA_CHDEC
Q1004
RK7002-TLB
Q1003
RK7002-TLB
Q1002
DTC124EUA-TLB
TS1_8 = CLK
TS1_9 = VALID
TS1_10 = FSTART
TS1_<7:0>=DATA<7:0>

R06 D-TUNER ASSY (2/6)

• DEMUX BLOCK

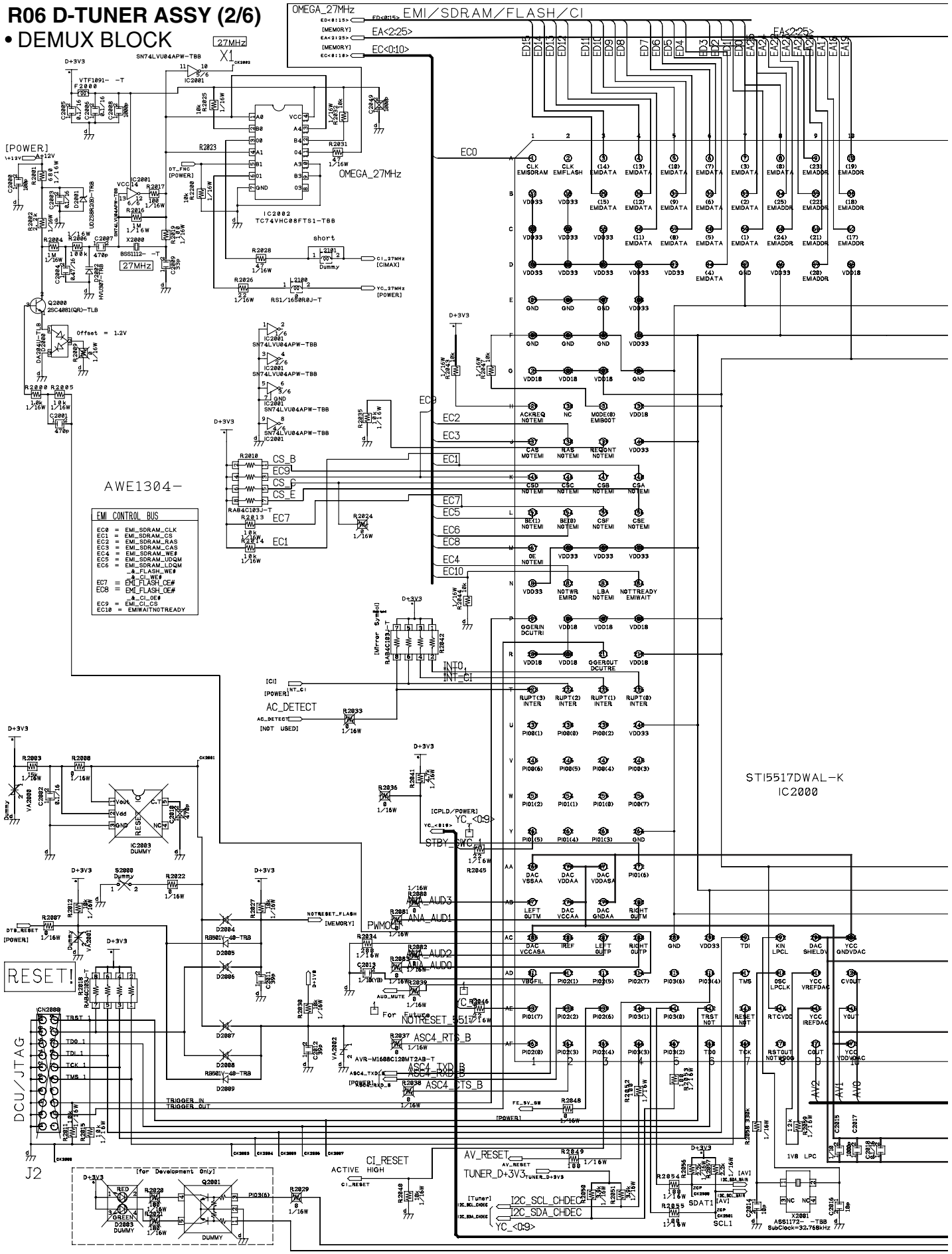

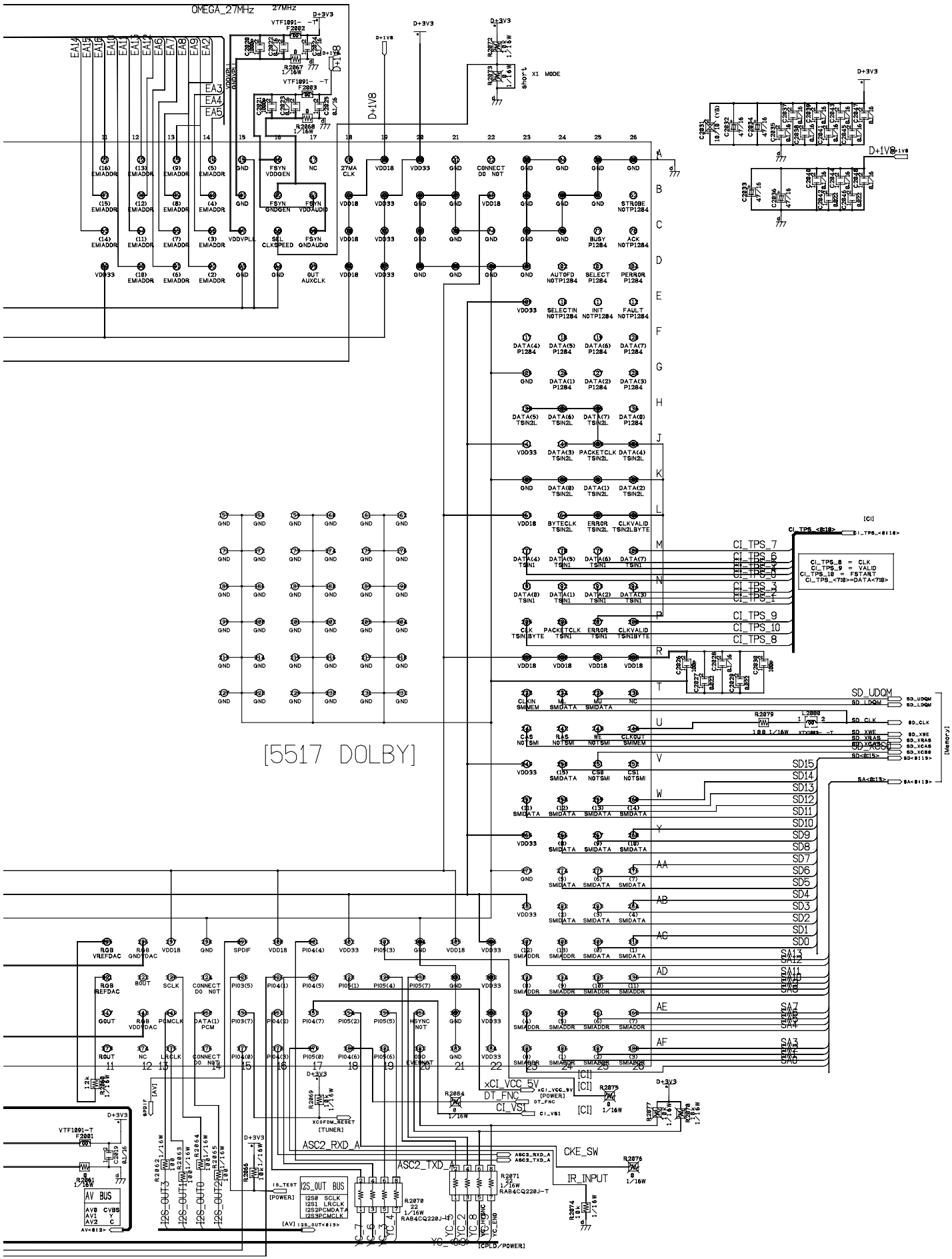
OMEGA_27MHz
27MHz
D+3V3
D+1V8
X1 MODE
short
[5517 DOLBY]
CI_TPS_7
CI_TPS_6
CI_TPS_9
CI_TPS_10
CI_TPS_8
SD_UDQM
SD_CLK
SD_XWE
SD_XRAS
SD_XCAS
SD_XCS
SD15
SD14
SD13
SD12
SD11
SD10
SD9
SD8
SD7
SD6
SD5
SD4
SD3
SD2
SD1
SD0
xCI_VCC_5V
DT_FNC
CI_VS1
ASC2_RXD_A
ASC2_TXD_A
CKE_SW
IR_INPUT
I2S_OUT BUS
AV BUS
PDP-R06XE

3.23 R06 D-TUNER ASSY (3/6)

R06 D-TUNER ASSY (3/6)

• MEMORY BLOCK

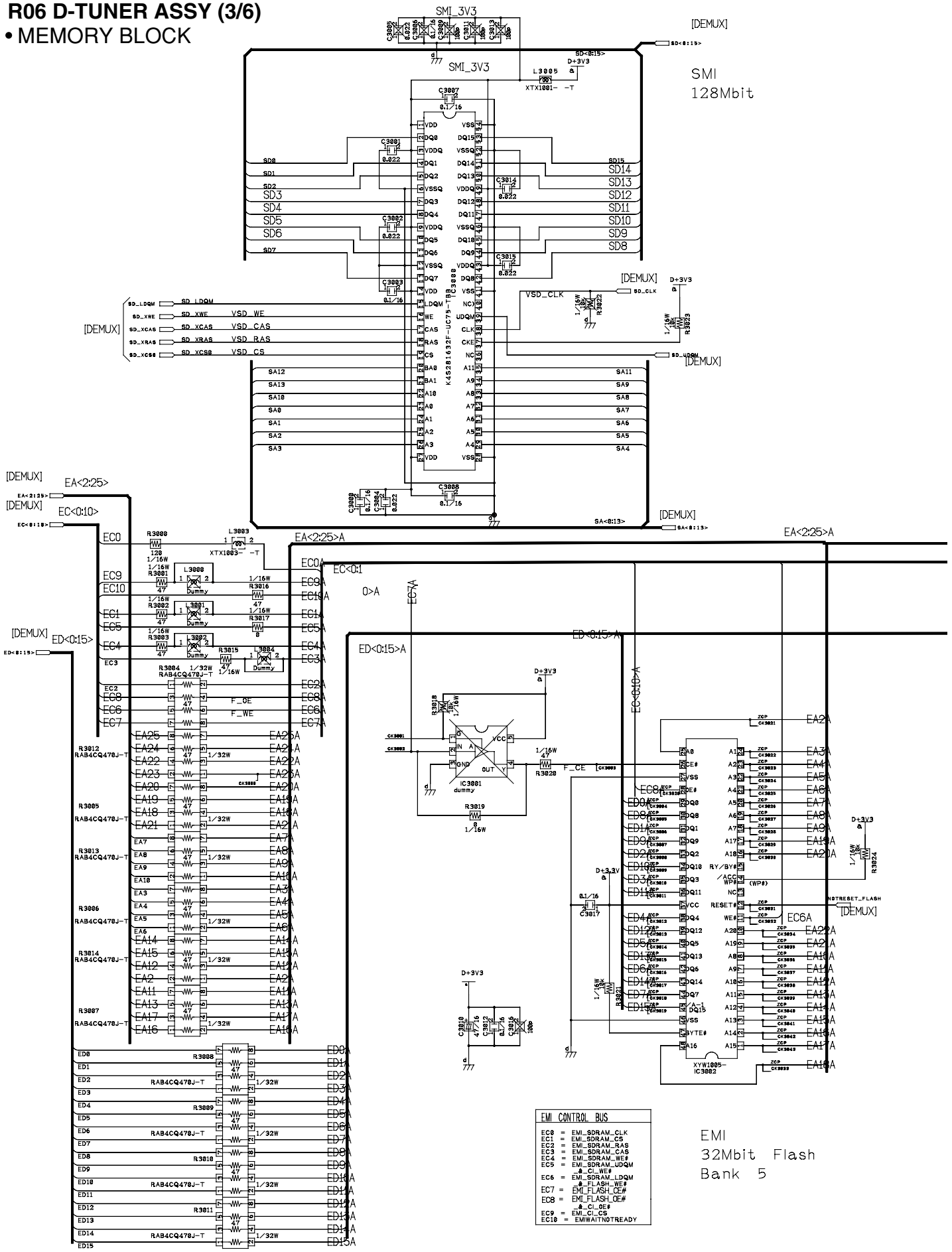

TRY TO KEEP 0.25MM TRACK AND GAP
FOR BUS. IF NOT POSSIBLE MAY DECREASE

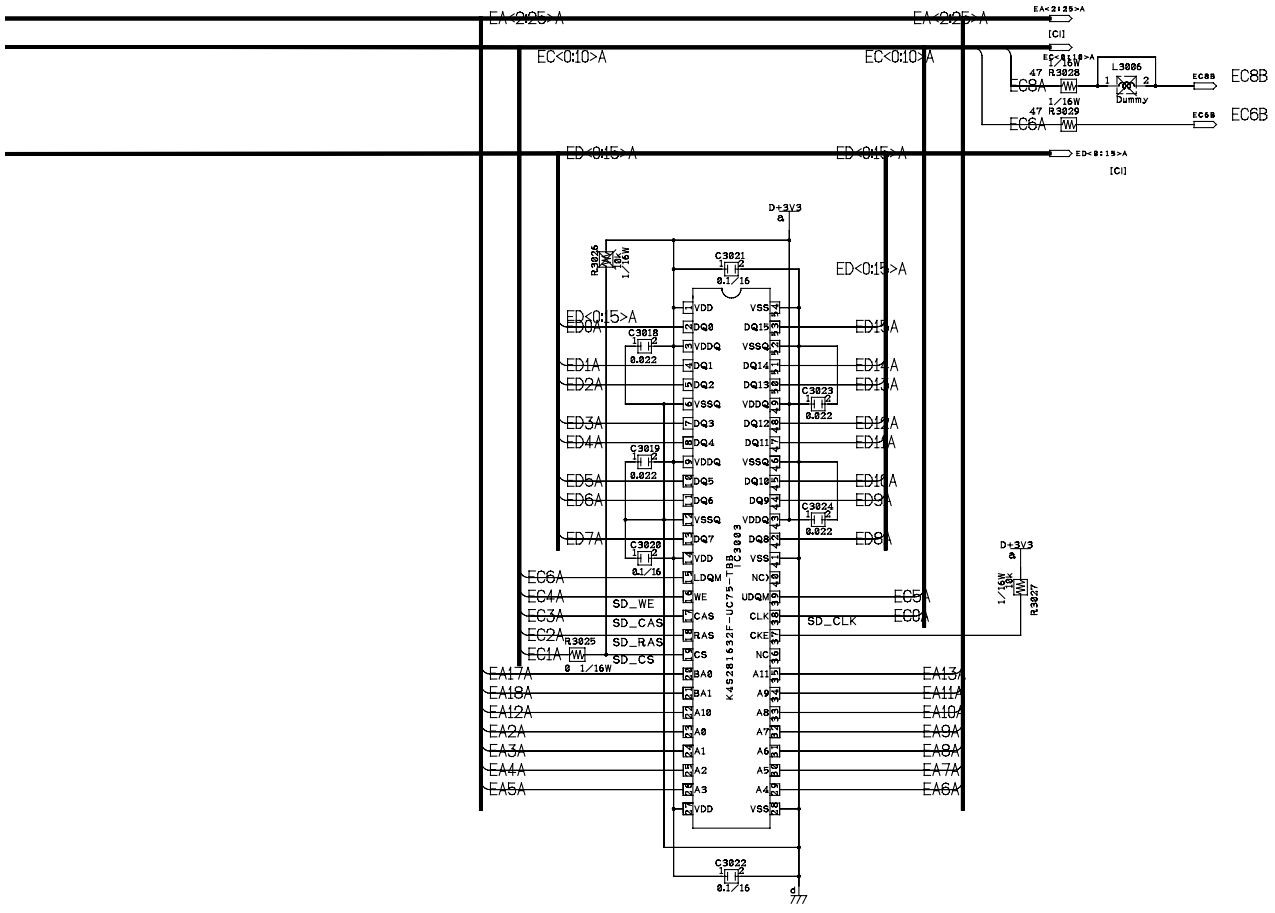

EMI
128Mbit
Bank 0

R06 D-TUNER ASSY (4/6)

• AV BLOCK

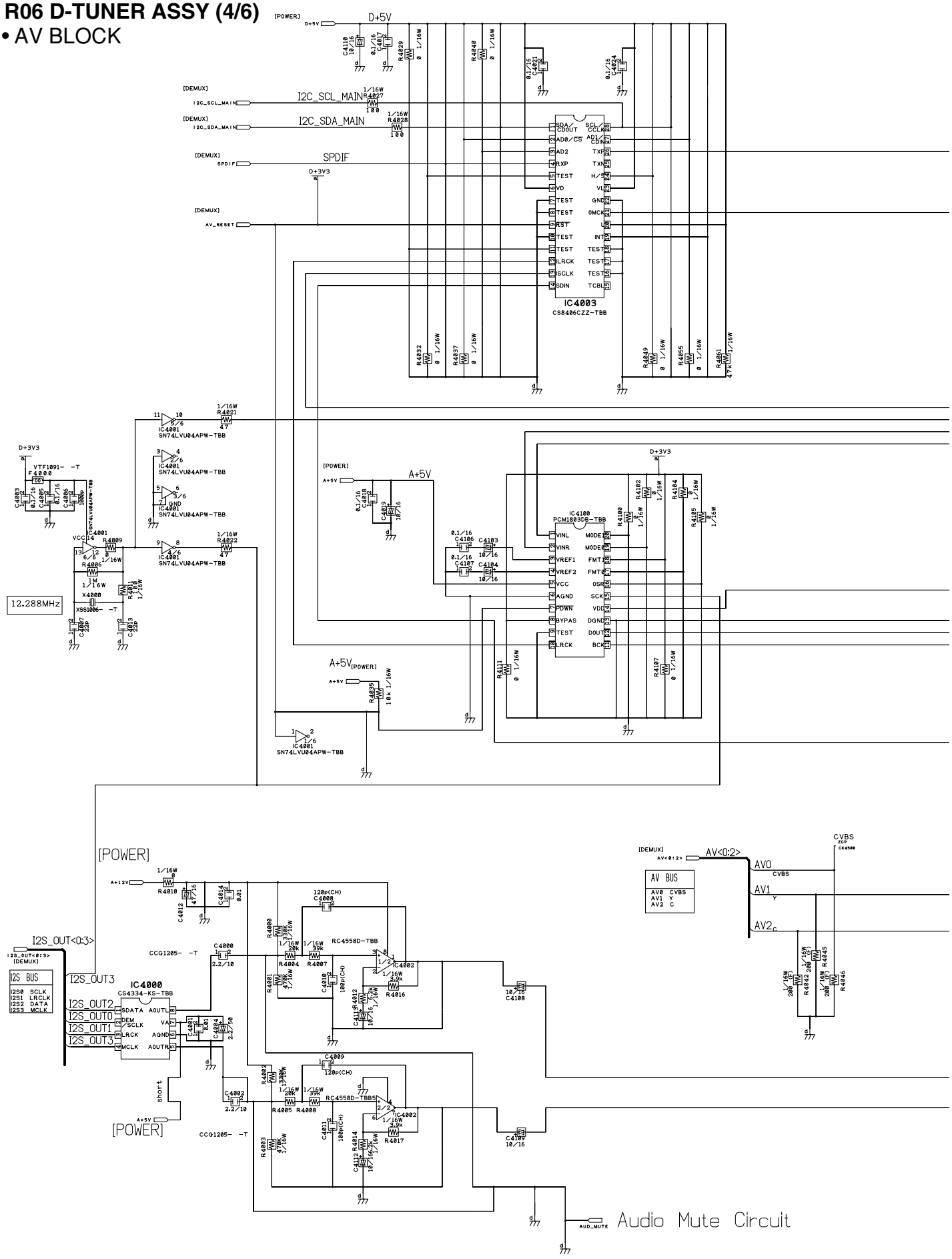

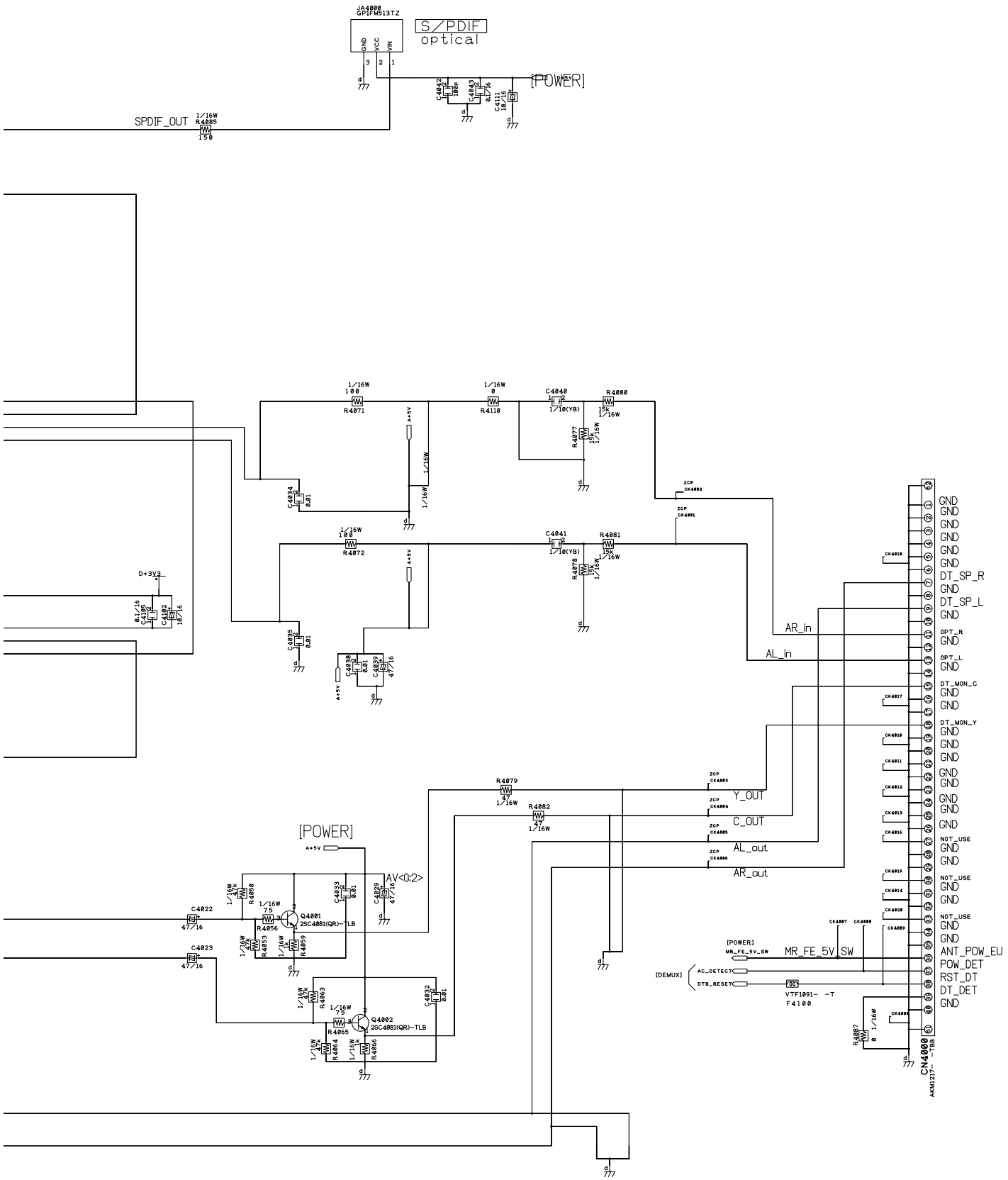
S/PDIF
optical
JA4000
GP1FM513TZ
GND
VCC
VIN
[POWER]
SPDIF_OUT
R4085
150
C4042
100p
C4043
0.1/16
C4111
10/16
R4071
R4110
R4080
C4040
1/10(YB)
R4077
15k
R4072
R4081
C4041
R4078
C4034
C4035
C4038
C4039
C4102
C4103
D+3V3
A+5V
AR_in
AL_in
Y_OUT
C_OUT
AL_out
AR_out
R4079
R4082
AV<0:2>
Q4001
2SC4081(QR)-TLB
Q4002
R4050
R4053
R4054
R4055
R4056
R4059
R4063
R4064
R4065
R4066
C4022
C4023
C4029
C4032
C4033
[DEMUX]
AC_DETECT
DTB_RESET
MR_FE_5V_SW
VTF1091- -T
F4100
R4087
CN4000
AKM1217- -TBB
GND
DT_SP_R
DT_SP_L
OPT_R
OPT_L
DT_MON_C
DT_MON_Y
NOT_USE
ANT_POW_EU
POW_DET
RST_DT
DT_DET

3.25 R06 D-TUNER ASSY (5/6)

R06 D-TUNER ASSY (5/6)

• COMMON-INTERFACE BLOCK

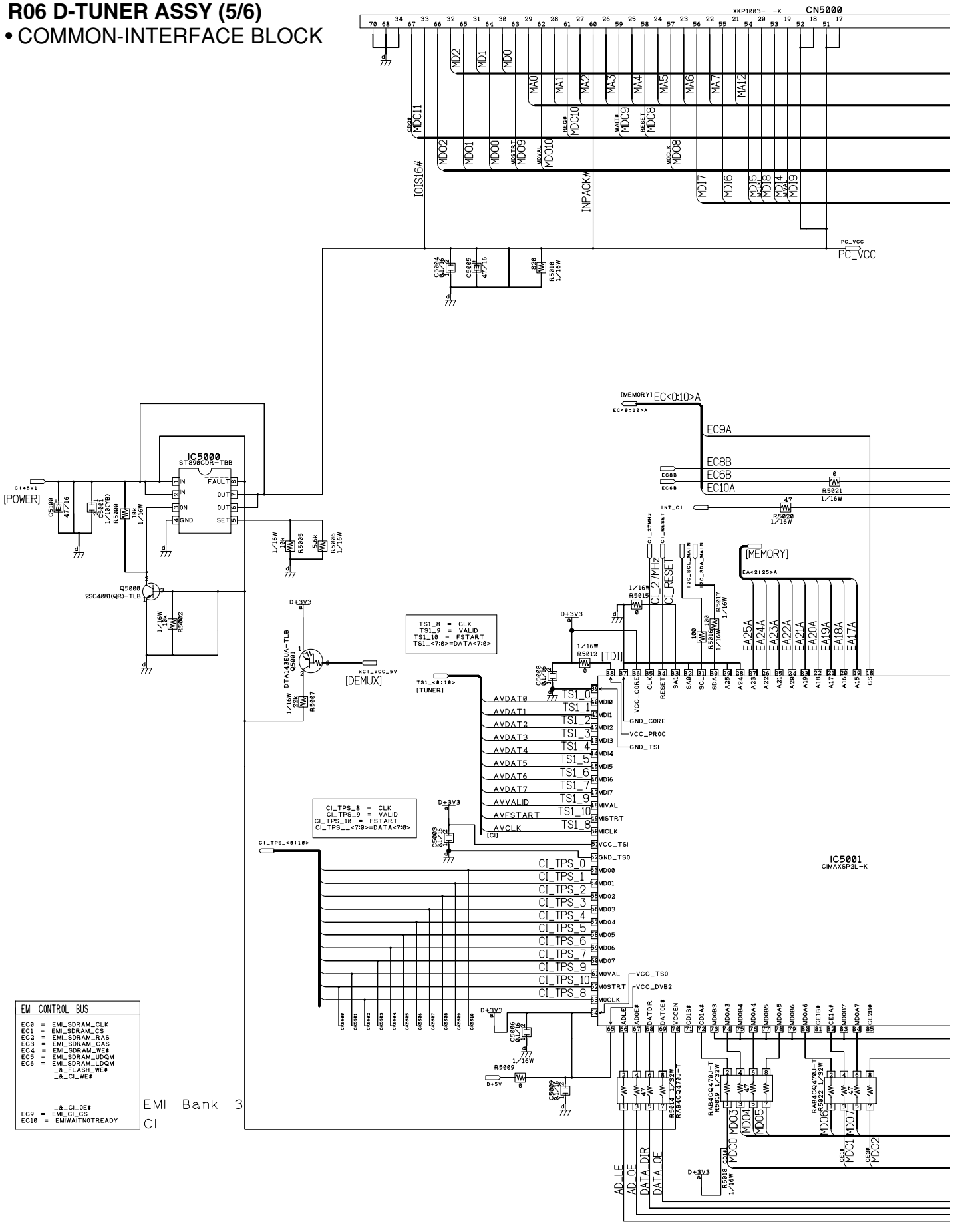

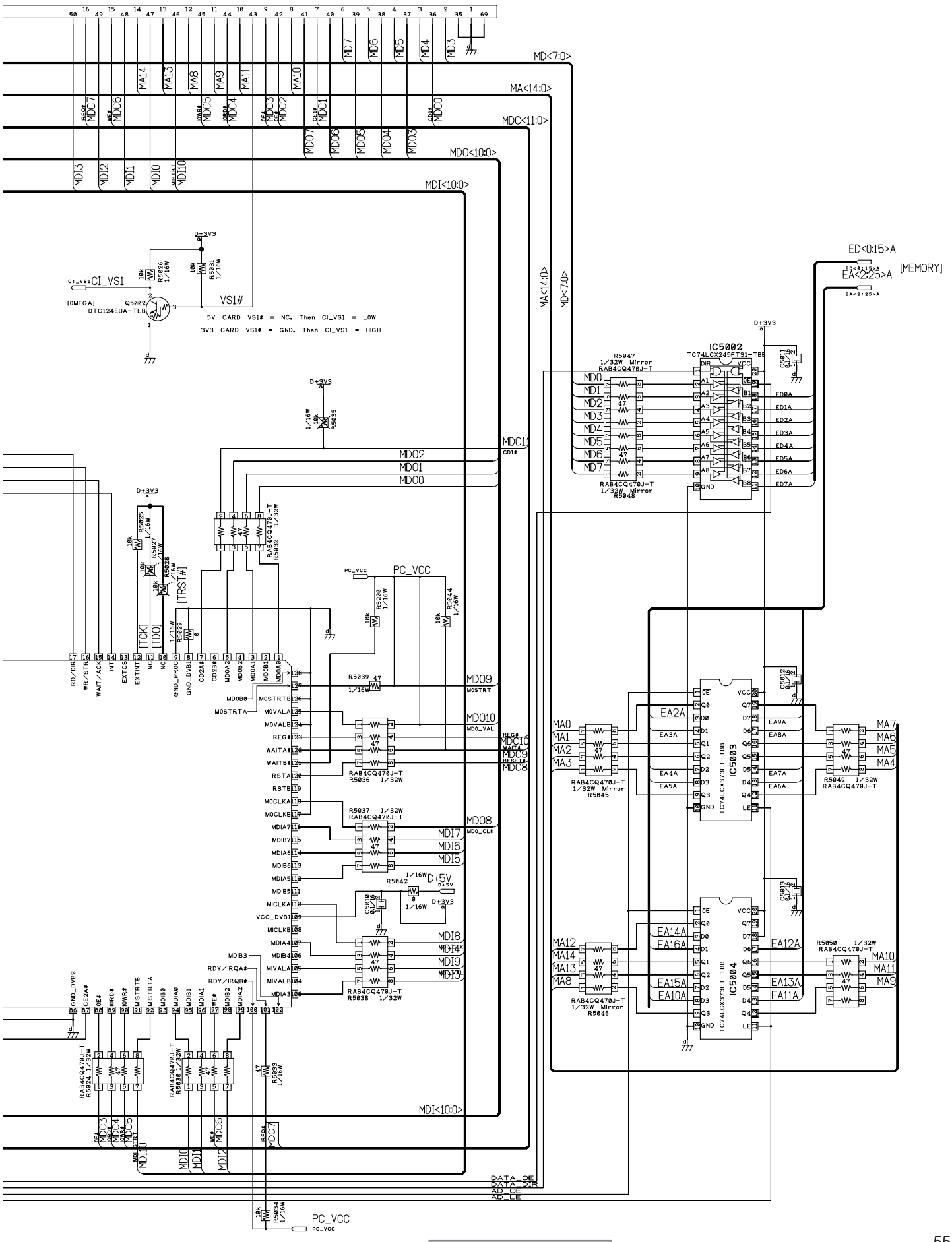
MD<7:0>
MA<14:0>
MDC<11:0>
MDO<10:0>
MDI<10:0>
ED<0:15>A
EA<2:25>A
[MEMORY]
CI_VS1
VS1#
5V CARD VS1# = NC. Then CI_VS1 = LOW
3V3 CARD VS1# = GND. Then CI_VS1 = HIGH
IC5002
TC74LCX245FTS1-TBB
IC5003
TC74LCX373FT-TBB
IC5004
TC74LCX373FT-TBB
PC_VCC
[TRST#]
[TCK]
[TDO]
D+5V
DATA_OE
DATA_DIR
AD_OE
AD_LE

3.26 R06 D-TUNER ASSY (6/6)

R06 D-TUNER ASSY (6/6)

• POWER BLOCK

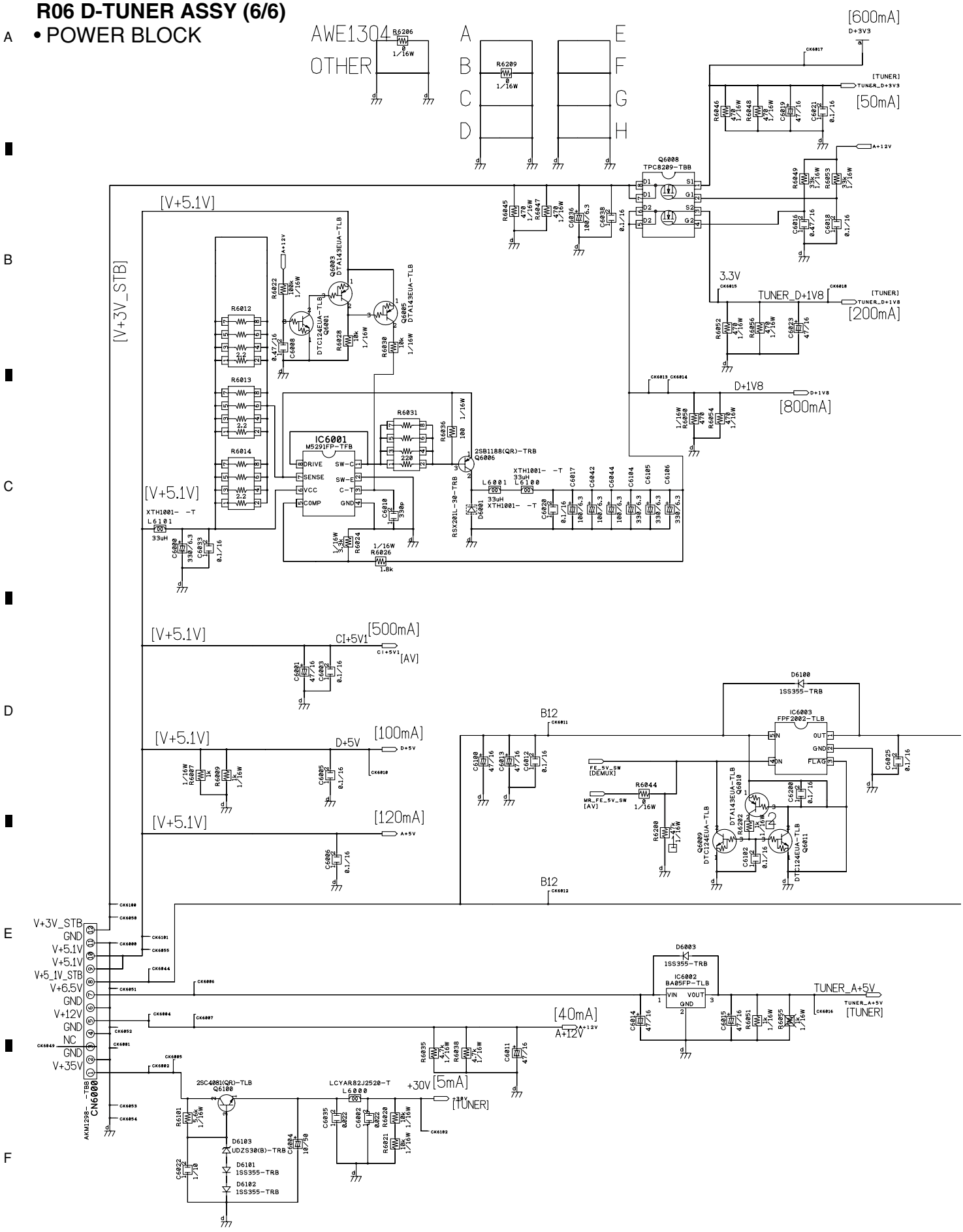

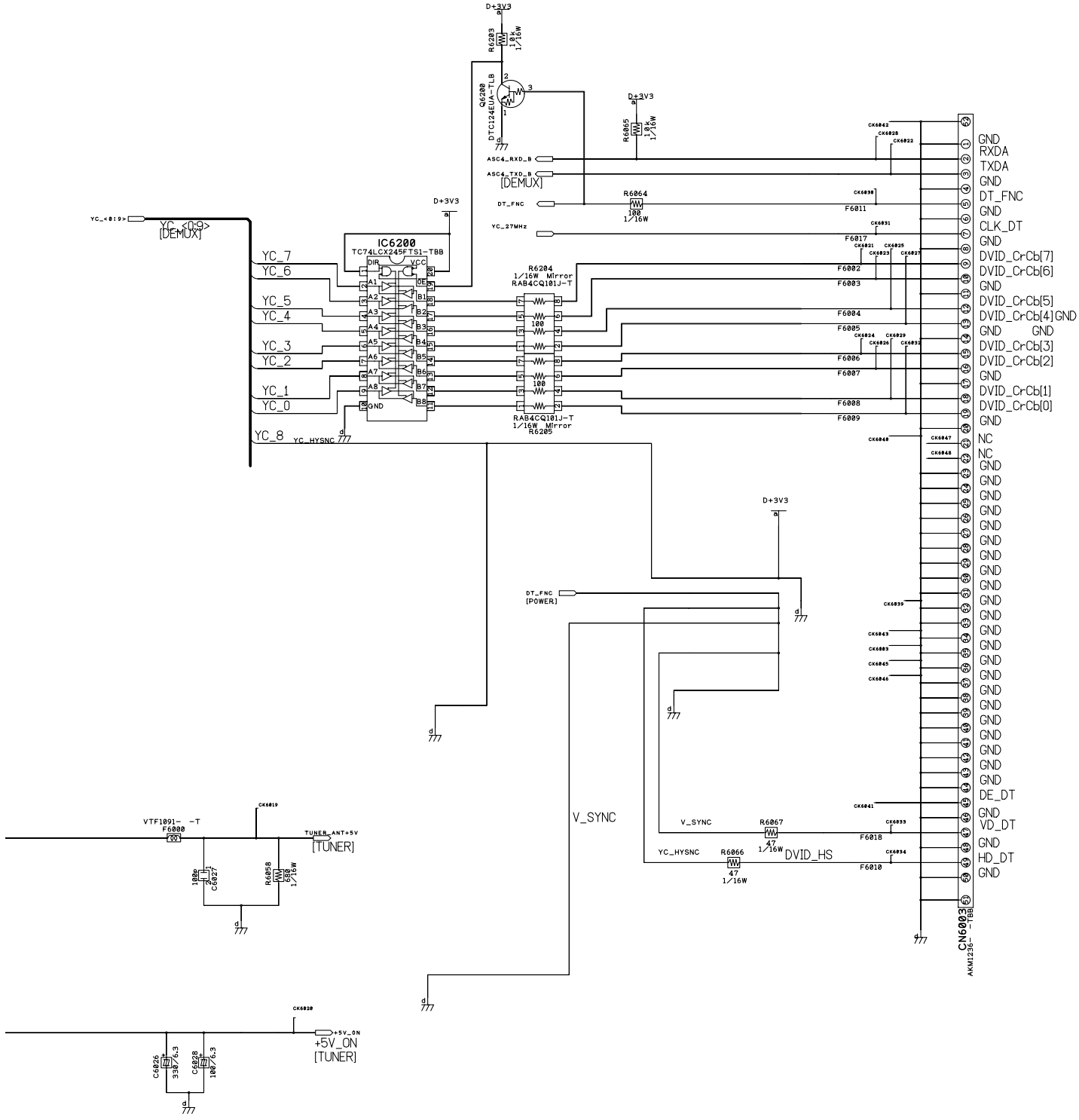
IC6200
TC74LCX245FTS1-TBB
R6204
1/16W Mirror
RAB4CQ101J-T
R6205
RAB4CQ101J-T
1/16W Mirror
R6203
10k
1/16W
Q6200
DTC124EUA-TLB
R6065
10k
1/16W
R6064
100
1/16W
R6067
47
1/16W
R6066
47
1/16W
R6058
680
1/16W
C6027
100p
C6026
330/6.3
C6028
100/6.3
VTF1091- -T
F6000
F6011
F6017
F6002
F6003
F6004
F6005
F6006
F6007
F6008
F6009
F6018
F6010
CN6003
AKM1236- -TBB
YC_<8:9>
[DEMUX]
YC_7
YC_6
YC_5
YC_4
YC_3
YC_2
YC_1
YC_0
YC_8
YC_HYSNC
ASC4_RXD_B
ASC4_TXD_B
[DEMUX]
DT_FNC
YC_27MHz
DT_FNC
[POWER]
V_SYNC
V_SYNC
YC_HYSNC
DVID_HS
TUNER_ANT+5V
[TUNER]
+5V_ON
[TUNER]
GND
RXDA
TXDA
GND
DT_FNC
GND
CLK_DT
GND
DVID_CrCb[7]
DVID_CrCb[6]
GND
DVID_CrCb[5]
DVID_CrCb[4]
GND
GND
DVID_CrCb[3]
DVID_CrCb[2]
GND
DVID_CrCb[1]
DVID_CrCb[0]
GND
NC
NC
GND
DE_DT
GND
VD_DT
GND
HD_DT
GND

3.27 POWER SUPPLY UNIT

POWER SUPPLY UNIT

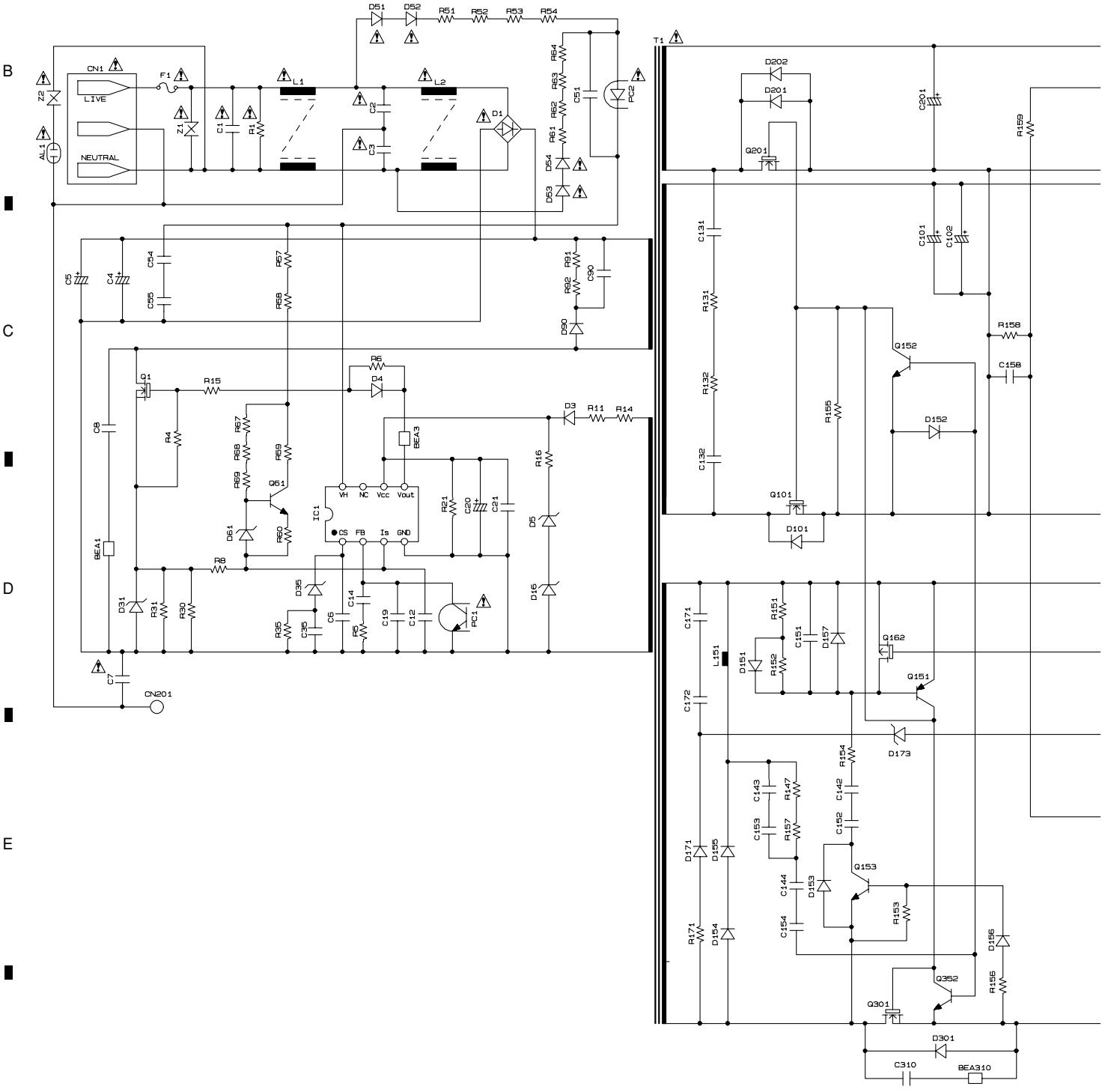

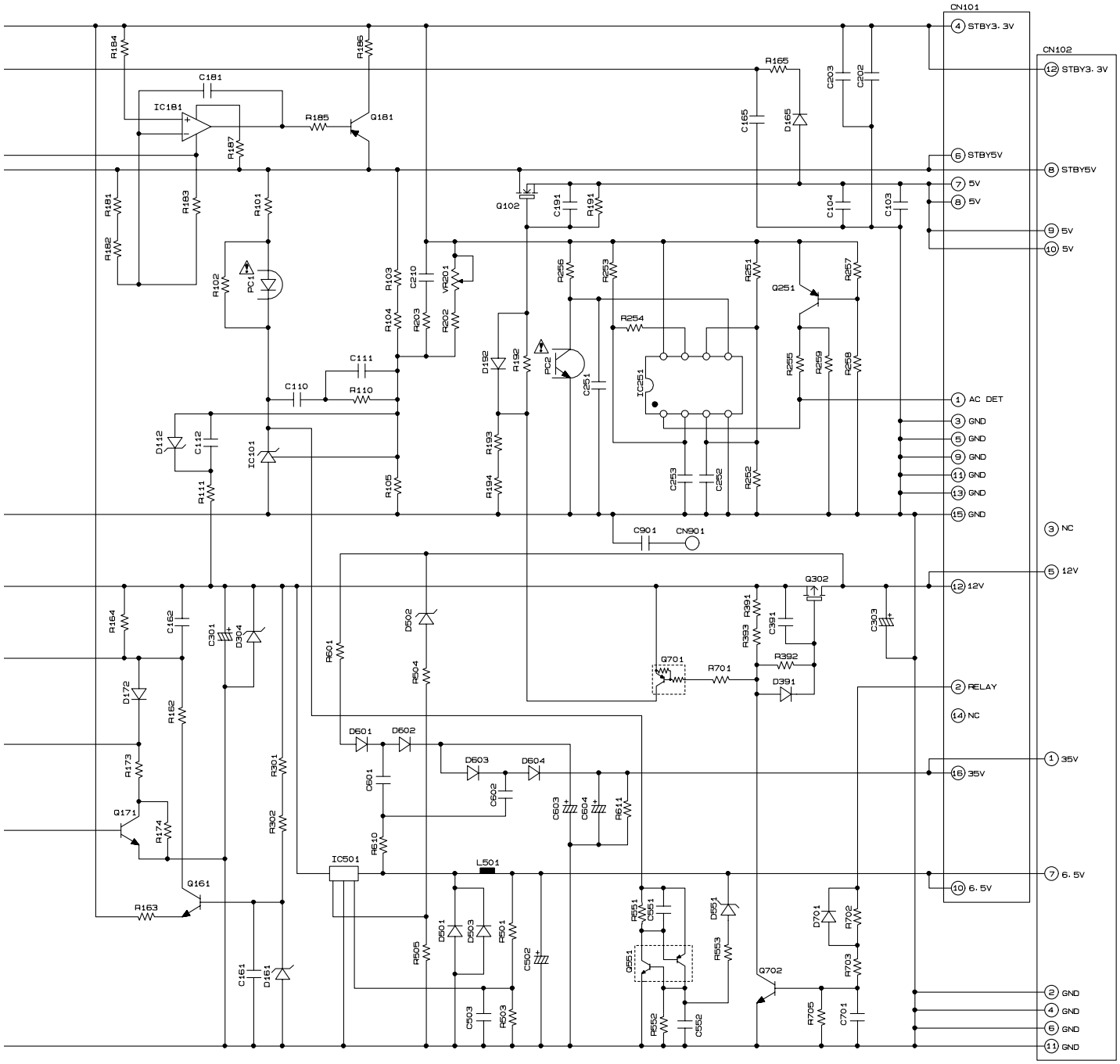
CN101
CN102
STBY3. 3V
STBY5V
5V
AC DET
GND
NC
12V
RELAY
35V
6. 5V
IC181
IC101
IC251
IC501
Q181
Q102
Q251
Q302
Q701
Q171
Q161
Q551
Q702
PC1
PC2
L501
CN901

4. PCB CONNECTION DIAGRAM
4.1 MR MAIN ASSY

SIDE A

MR MAIN ASSY

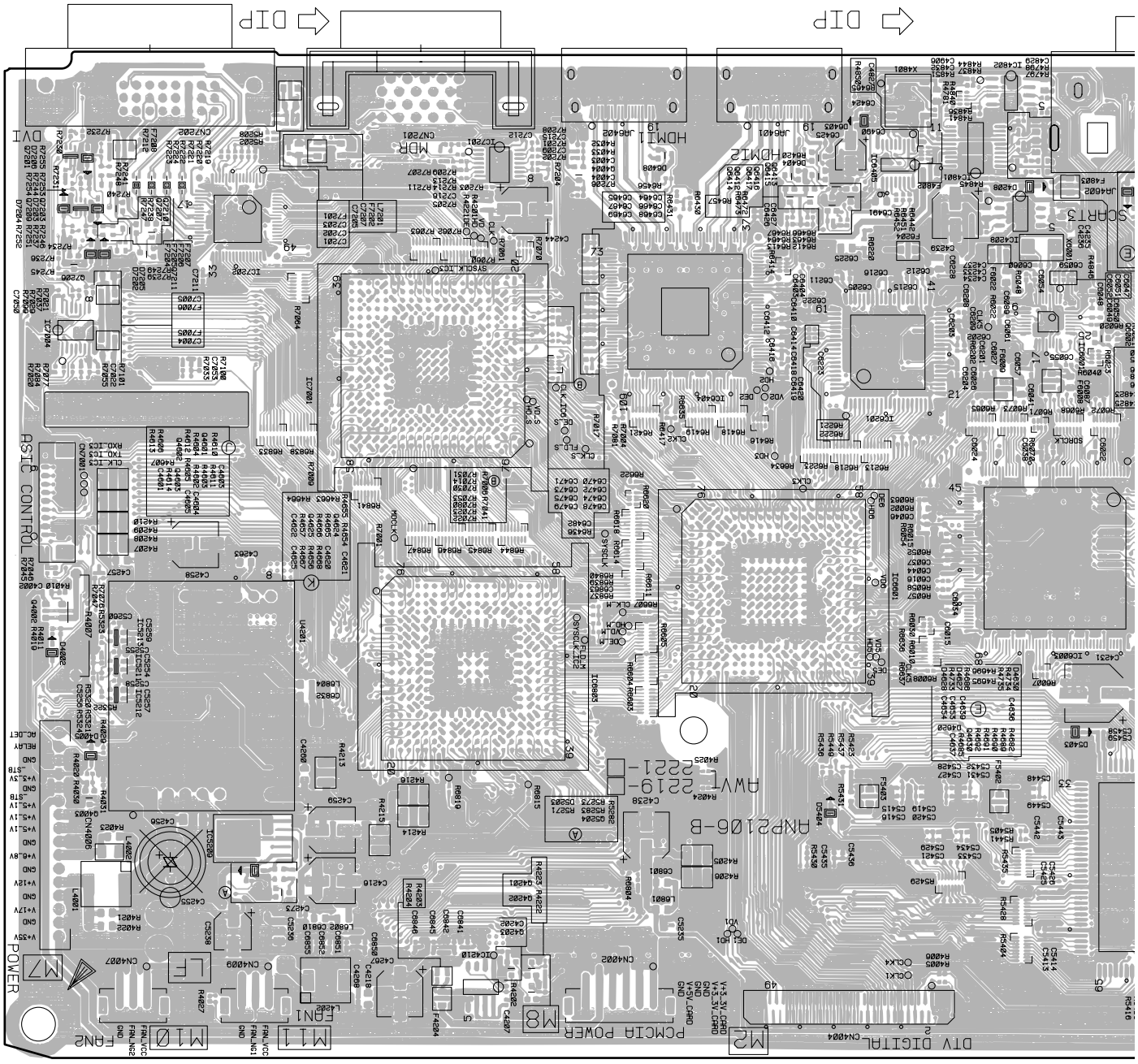

SIDE A

NOTE FOR PCB DIAGRAMS :

1. Part numbers in PCB diagrams match those in the schematic diagrams.
2. A comparison between the main parts of PCB and schematic diagrams is shown below.

Symbol In PCB Diagrams	Symbol In Schematic Diagrams	Part Name
B C E	B C E B C E	Transistor
B C E	B C E B C E	Transistor with resistor
D G S	D G S D G S	Field effect transistor
		Resistor array
		3-terminal regulator

3. The parts mounted on this PCB include all necessary parts for several destinations.
   For further information for respective destinations, be sure to check with the schematic diagram.
4. View point of PCB diagrams.

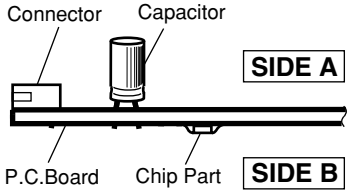

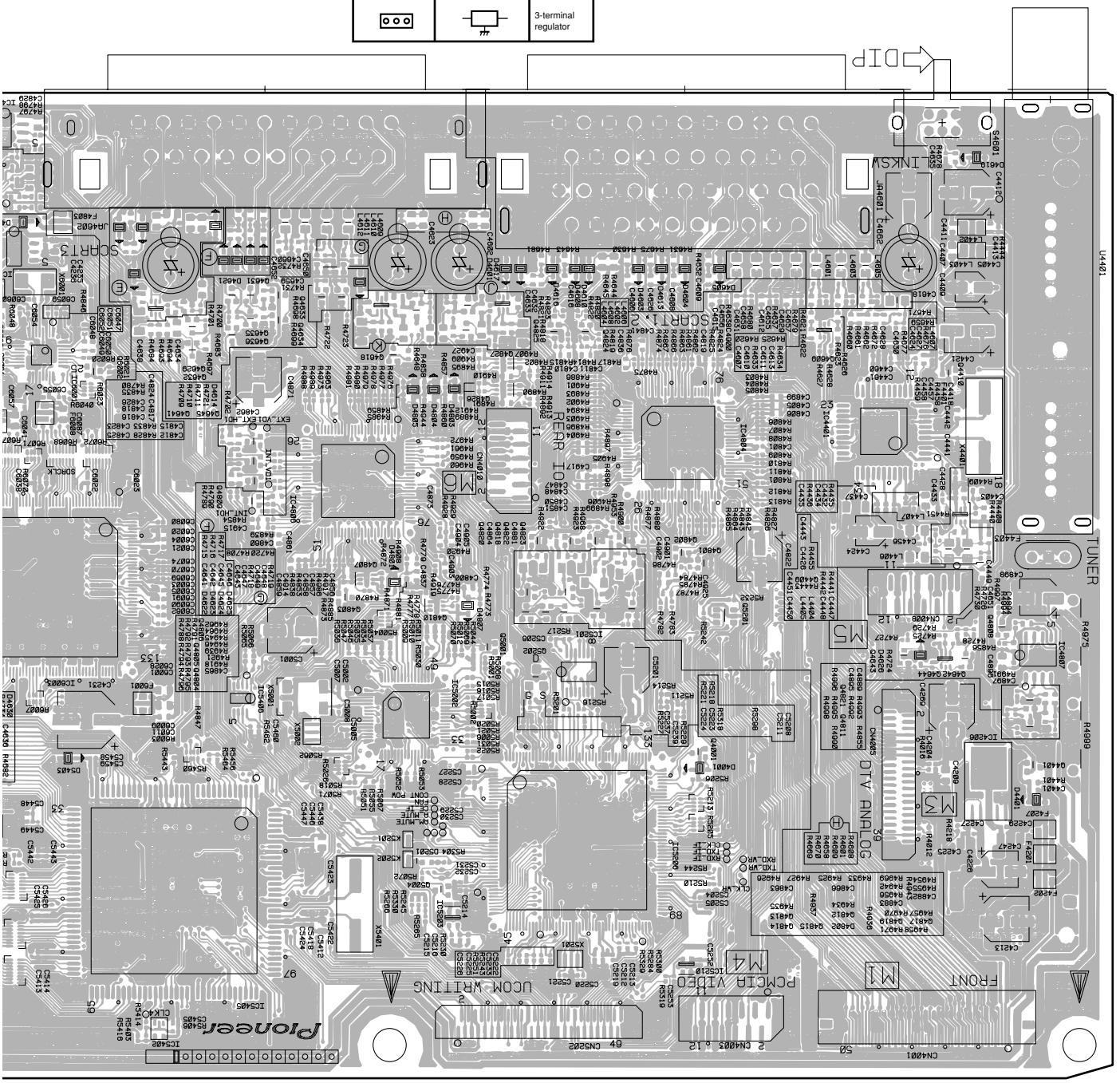

(ANP2106-B)

SIDE B

MR MAIN ASSY

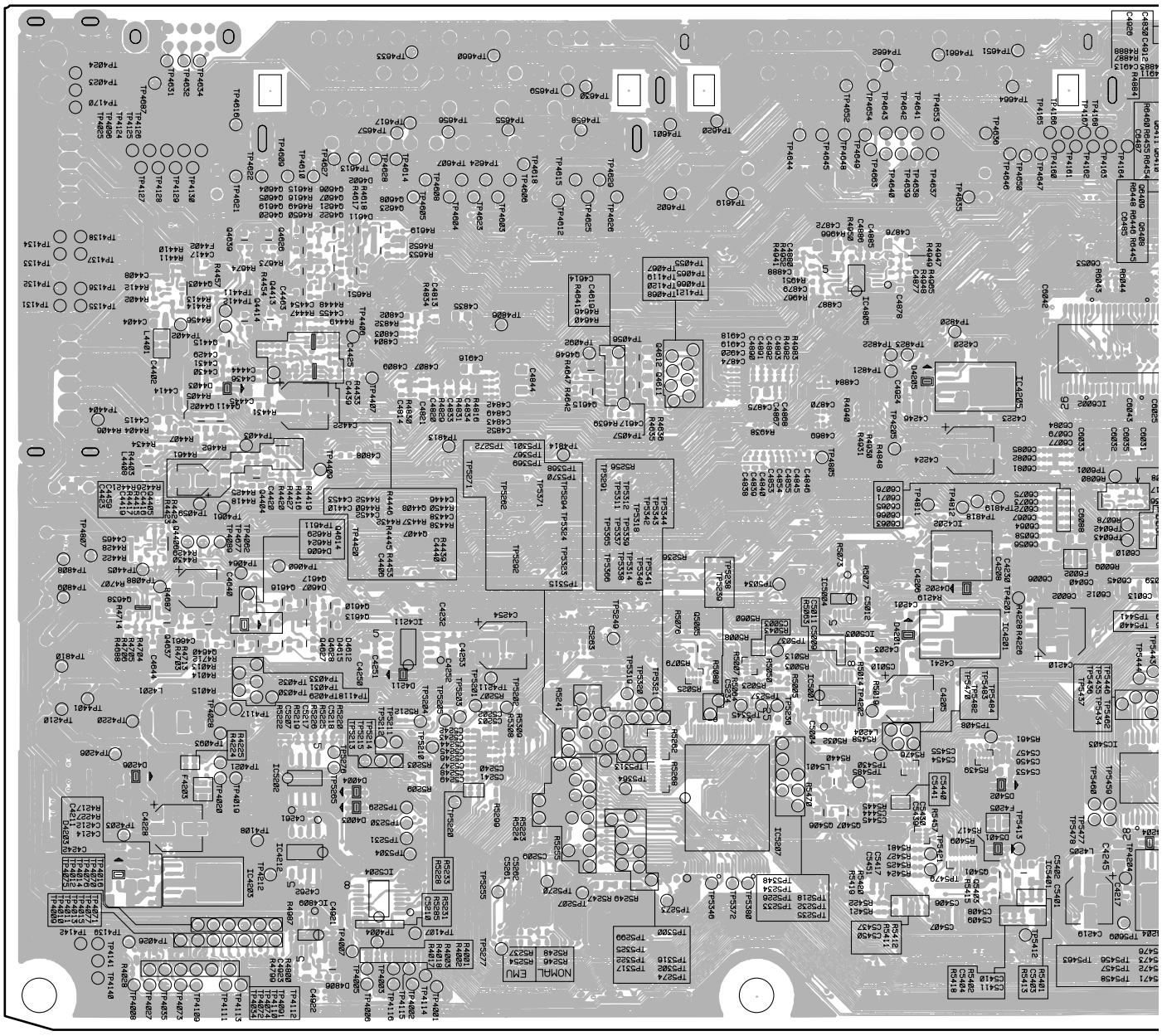

SIDE B

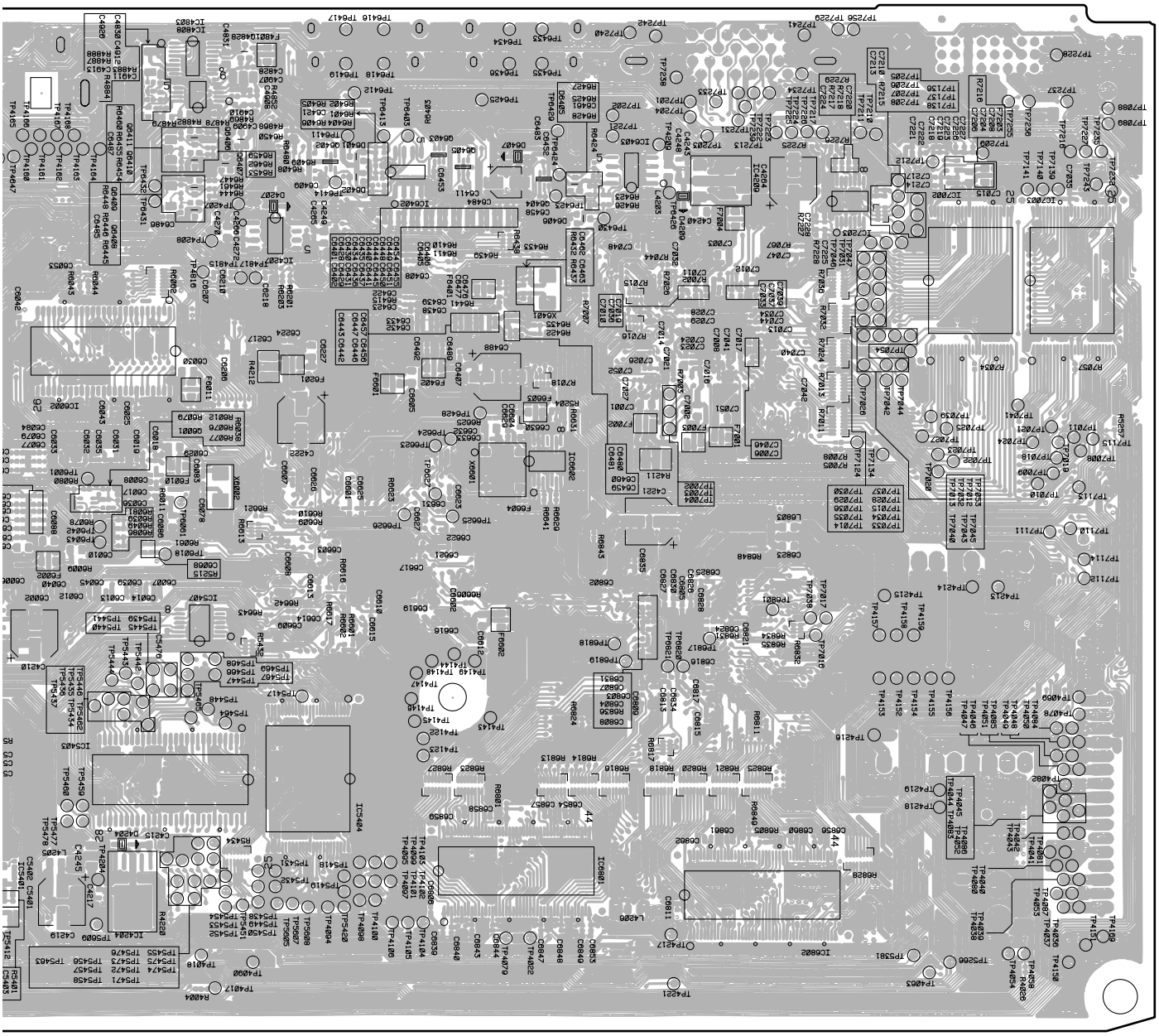

(ANP2106-B)

4.2 REAR IO, SR, FRONT and LED ASSYS

SIDE A

SIDE A

SR ASSY
(ANP2107-B)

REAR IO ASSY
(ANP2107-B)

LED ASSY
(ANP2107-B)

FRONT ASSY
(ANP2107-B)

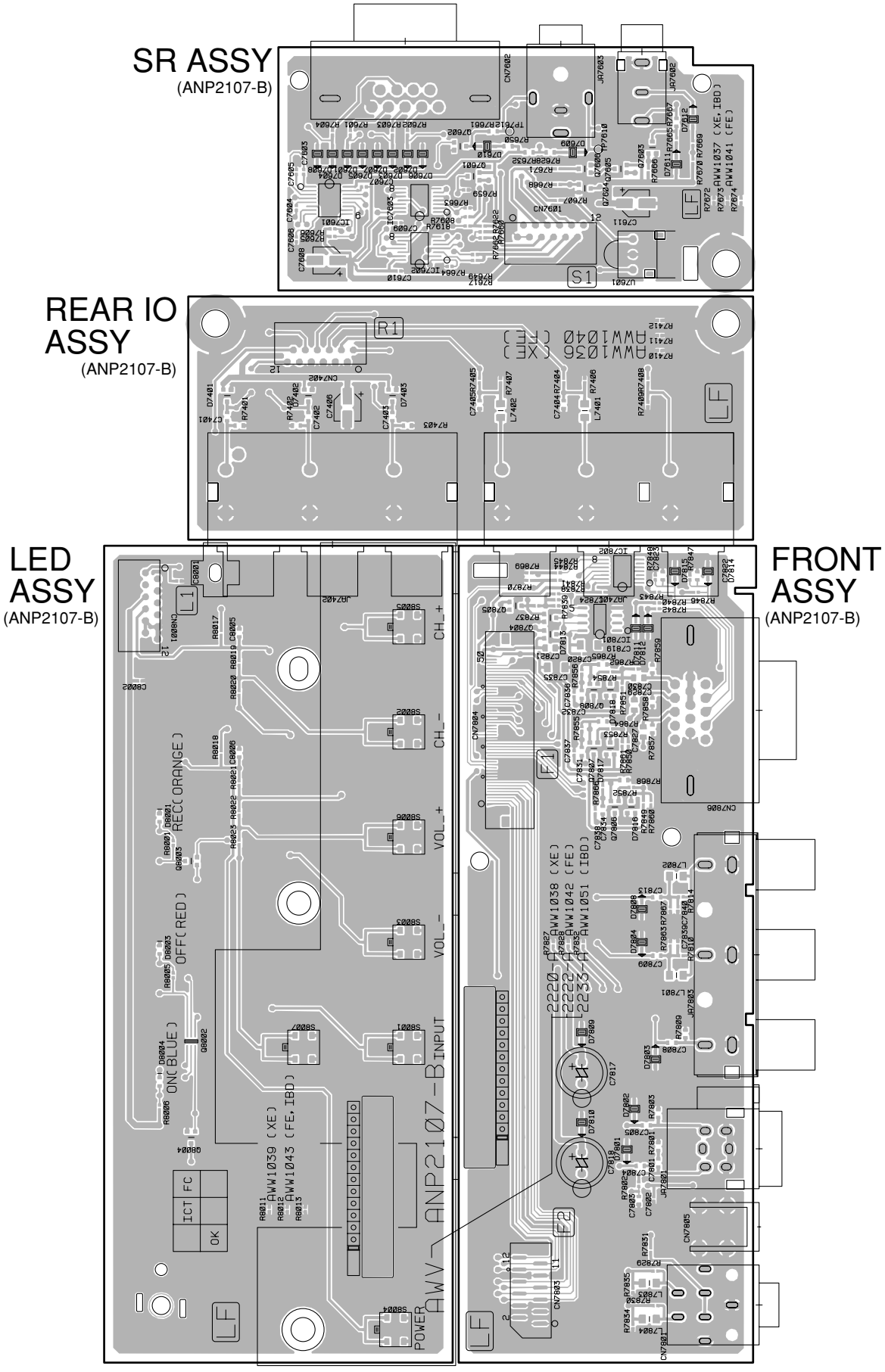

SIDE B

SIDE B

SR ASSY
(ANP2107-B)

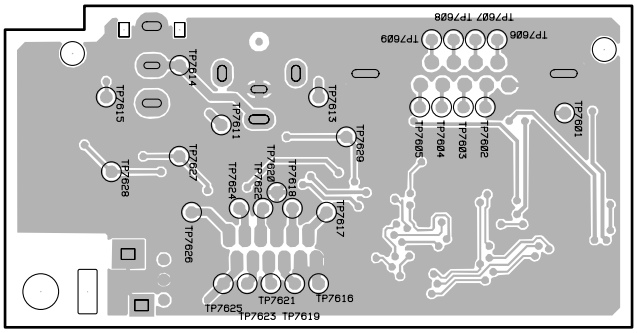

REAR IO ASSY
(ANP2107-B)

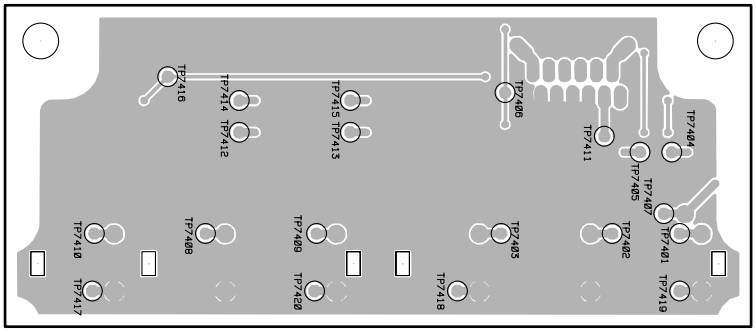

FRONT ASSY
(ANP2107-B)

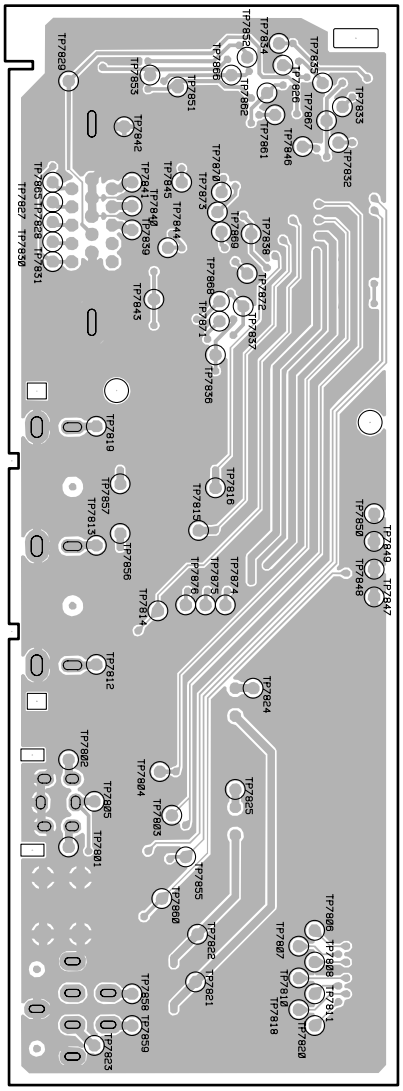

LED ASSY
(ANP2107-B)

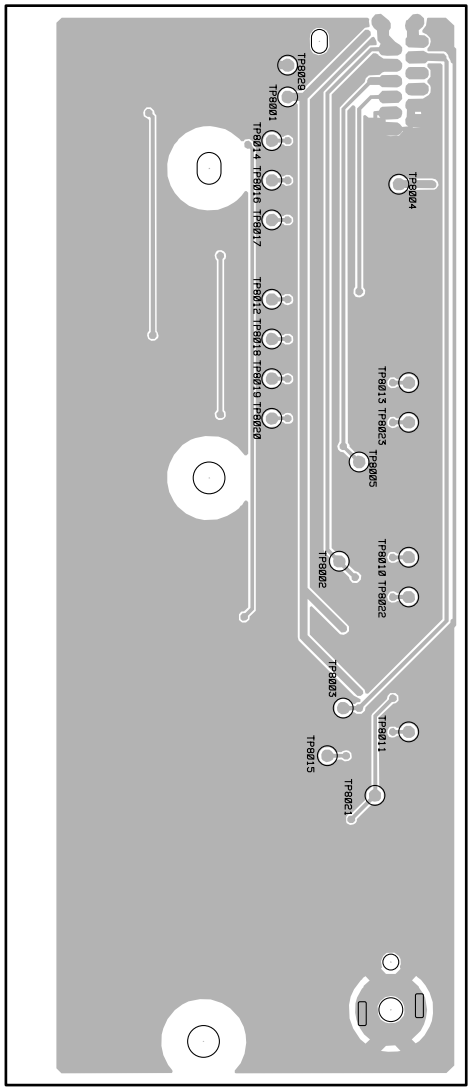

4.3 R06 D-TUNER ASSY

SIDE A

R06 D-TUNER ASSY

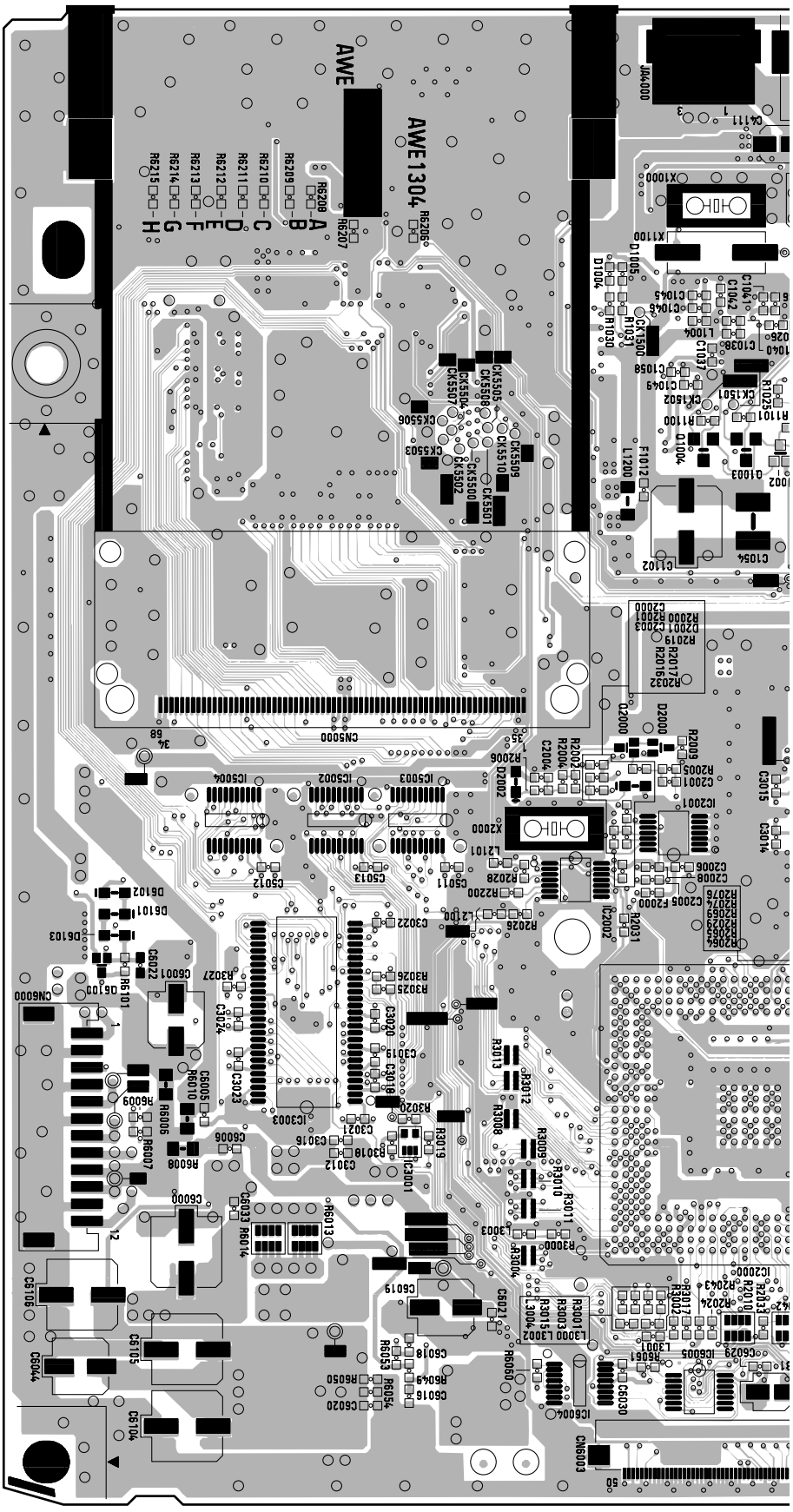

SIDE A

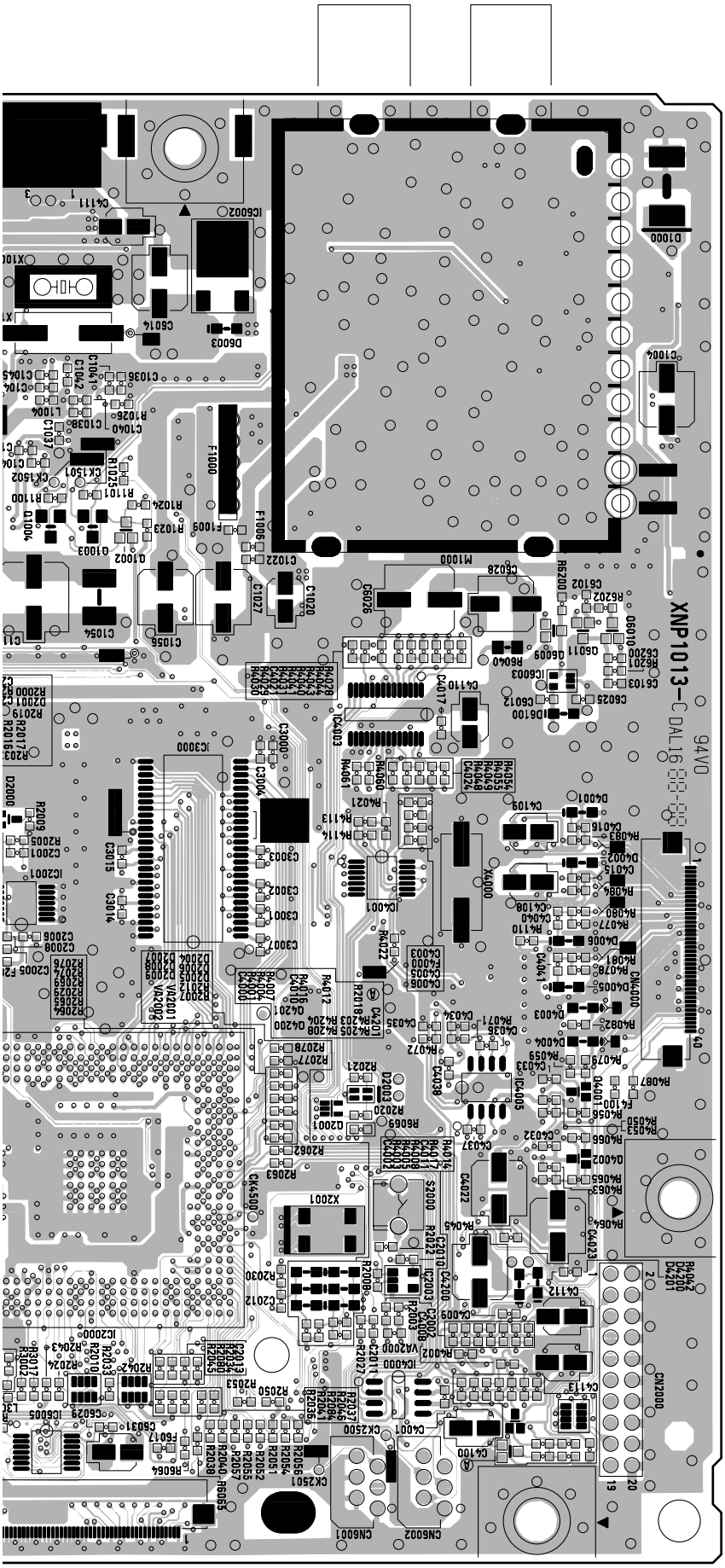

(XNP1013-C)

SIDE B

R06 D-TUNER ASSY

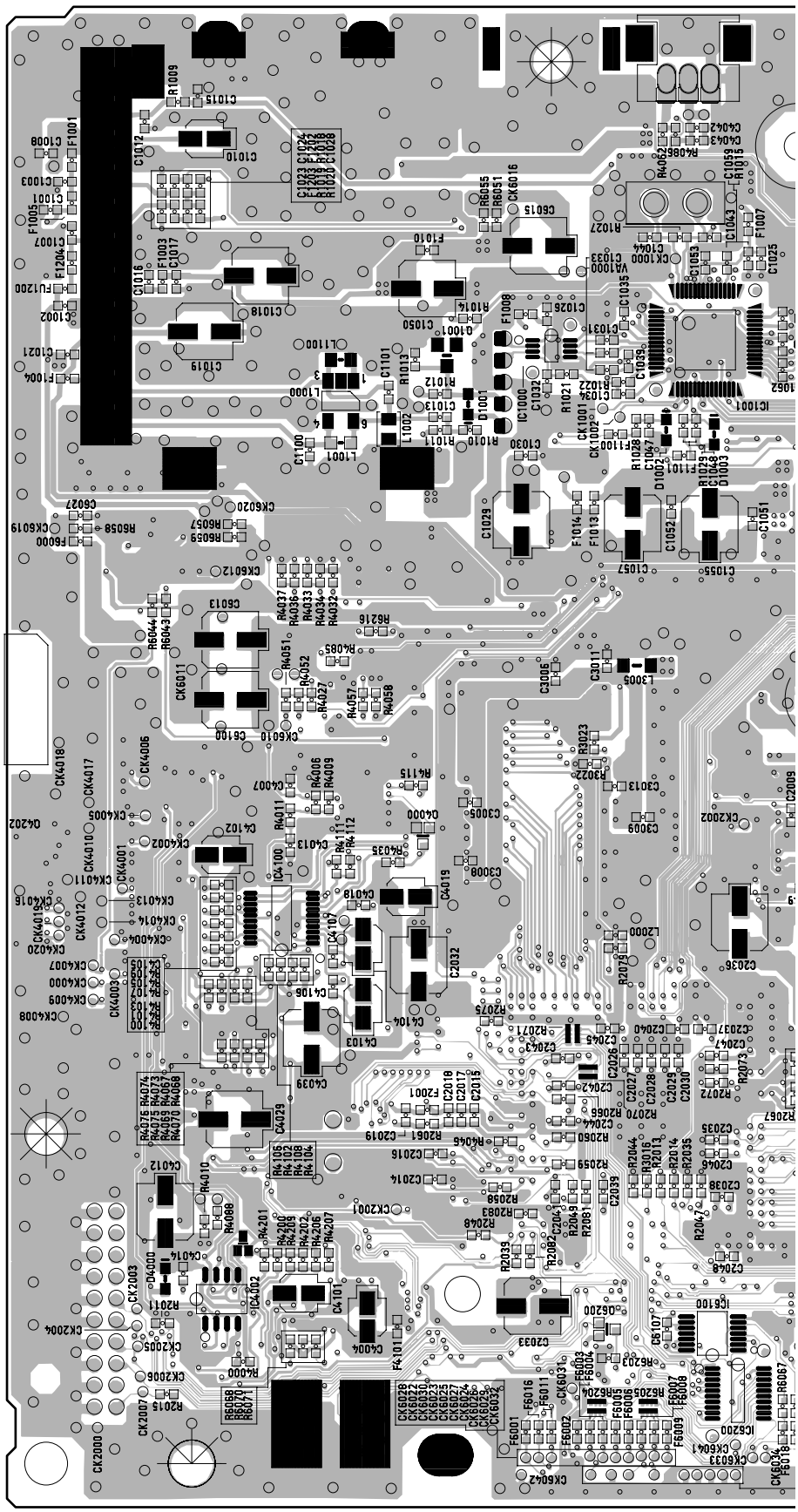

SIDE B

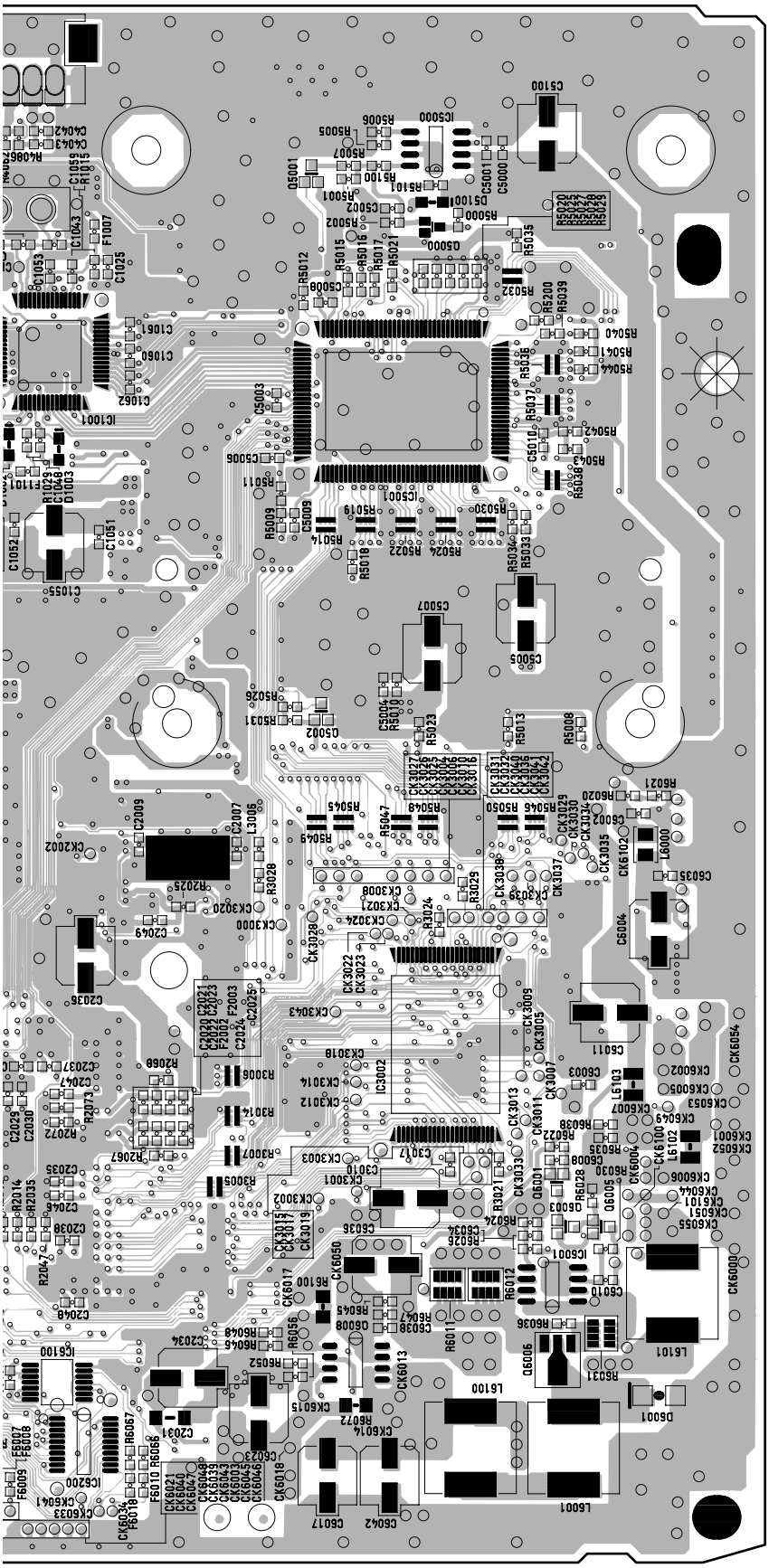

(XNP1013-C)

Pioneer sound.vision.soul

Service Manual

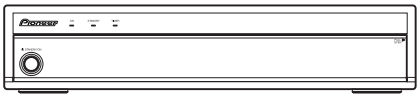

PDP-R06XE

ORDER NO.
ARP3275

MEDIA RECEIVER

PDP-R06XE
PDP-R06FE

THIS MANUAL IS APPLICABLE TO THE FOLLOWING MODEL(S) AND TYPE(S).

Model	Type	Power Requirement	Remarks
PDP-R06XE	WYVIXK5	AC220-240V	
PDP-R06FE	WYVI5	AC220-240V	
PDP-R06FE	WYVIXK5	AC220-240V	

This service manual should be used together with the following manual(s).

Model No.	Order No.	Remarks
PDP-R06XE, PDP-R06FE	ARP3276	SCHEMATIC DIAGRAM, PCB CONNECTION DIAGRAM

For details, refer to "Important Check Points for good servicing".

PIONEER CORPORATION 4-1, Meguro 1-chome, Meguro-ku, Tokyo 153-8654, Japan
PIONEER ELECTRONICS (USA) INC. P.O. Box 1760, Long Beach, CA 90801-1760, U.S.A.
PIONEER EUROPE NV Haven 1087, Keetberglaan 1, 9120 Melsele, Belgium
PIONEER ELECTRONICS ASIACENTRE PTE. LTD. 253 Alexandra Road, #04-01, Singapore 159936
ⓒ**PIONEER CORPORATION 2005**

T-IZR AUG. 2005 printed in Japan

SAFETY INFORMATION

This service manual is intended for qualified service technicians; it is not meant for the casual do-it-yourselfer. Qualified technicians have the necessary test equipment and tools,and have been trained to properly and safely repair complex products such as those covered by this manual. Improperly performed repairs can adversely affect the safety and reliability of the product and may void the warranty. If you are not qualified to perform the repair of this product properly and safely you , should not risk trying to do so and refer the repair to a qualified service technician.

WARNING

This product contains and certain electrical parts contain chemicals which are known to the state of California to cause cancer, birth defects or other reproductive harm.

Health & Safety CodeSection 25249.6 – Proposition 65

This product contains mercury. Disposal of this material may be regulated due to evironmental considerations. For disposal or recycling information, please contact your local authoritier of the Electronice Industries Alliance : www.eiae.org.

NOTICE

(FOR CANADIAN MODEL ONLY)

Fuse symbols (fast operating fuse) and/or (slow operating fuse) on PCB indicate that replacement parts must be of identical designation.

REMARQUE

(POUR MODÈLE CANADIEN SEULEMENT)

Les symboles de fusible (fusible de type rapide) et/ou (fusible de type lent) sur CCI indiquent que les pièces de remplacement doivent avoir la même désignation.

(FOR USA MODEL ONLY)

1. SAFETY PRECAUTIONS

The following check should be performed for the continued protection of the customer and service technician.

LEAKAGE CURRENT CHECK

Measure leakage current to a known earth ground (water pipe, conduit, etc.) by connecting a leakage current tester such as Simpson Model 229-2 or equivalent between the earth ground and all exposed metal parts of the appliance (input/output terminals, screwheads, metal overlays, control shaft, etc.). Plug the AC line cord of the appliance directly into a 120V AC 60 Hz outlet and turn the AC power switch on. Any current measured must not exceed 0.5 mA.

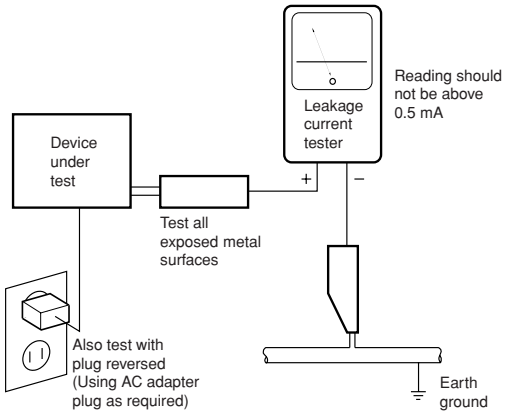

AC Leakage Test

ANY MEASUREMENTS NOT WITHIN THE LIMITS OUTLINED ABOVE ARE INDICATIVE OF A POTENTIAL SHOCK HAZARD AND MUST BE CORRECTED BEFORE RETURNING THE APPLIANCE TO THE CUSTOMER.

2. PRODUCT SAFETY NOTICE

Many electrical and mechanical parts in the appliance have special safety related characteristics. These are often not evident from visual inspection nor the protection afforded by them necessarily can be obtained by using replacement components rated for voltage, wattage, etc. Replacement parts which have these special safety characteristics are identified in this Service Manual.

Electrical components having such features are identified by marking with a ⚠ on the schematics and on the parts list in this Service Manual.

The use of a substitute replacement component which does not have the same safety characteristics as the PIONEER recommended replacement one, shown in the parts list in this Service Manual, may create shock, fire, or other hazards.

Product Safety is continuously under review and new instructions are issued from time to time. For the latest information, always consult the current PIONEER Service Manual. A subscription to, or additional copies of, PIONEER Service Manual may be obtained at a nominal charge from PIONEER.

[Important Check Points for Good Servicing]

In this manual, procedures that must be performed during repairs are marked with the below symbol.
Please be sure to confirm and follow these procedures.

1. Product safety

Please conform to product regulations (such as safety and radiation regulations), and maintain a safe servicing environment by following the safety instructions described in this manual.

① Use specified parts for repair.

Use genuine parts. Be sure to use important parts for safety.

② Do not perform modifications without proper instructions.

Please follow the specified safety methods when modification(addition/change of parts) is required due to interferences such as radio/TV interference and foreign noise.

③ Make sure the soldering of repaired locations is properly performed.

When you solder while repairing, please be sure that there are no cold solder and other debris.
Soldering should be finished with the proper quantity. (Refer to the example)

④ Make sure the screws are tightly fastened.

Please be sure that all screws are fastened, and that there are no loose screws.

⑤ Make sure each connectors are correctly inserted.

Please be sure that all connectors are inserted, and that there are no imperfect insertion.

⑥ Make sure the wiring cables are set to their original state.

Please replace the wiring and cables to the original state after repairs.
In addition, be sure that there are no pinched wires, etc.

⑦ Make sure screws and soldering scraps do not remain inside the product.

Please check that neither solder debris nor screws remain inside the product.

⑧ There should be no semi-broken wires, scratches, melting, etc. on the coating of the power cord.

Damaged power cords may lead to fire accidents, so please be sure that there are no damages.
If you find a damaged power cord, please exchange it with a suitable one.

⑨ There should be no spark traces or similar marks on the power plug.

When spark traces or similar marks are found on the power supply plug, please check the connection and advise on secure connections and suitable usage. Please exchange the power cord if necessary.

⑩ Safe environment should be secured during servicing.

When you perform repairs, please pay attention to static electricity, furniture, household articles, etc. in order to prevent injuries.
Please pay attention to your surroundings and repair safely.

2. Adjustments

To keep the original performance of the products, optimum adjustments and confirmation of characteristics within specification.
Adjustments should be performed in accordance with the procedures/instructions described in this manual.

3. Lubricants, Glues, and Replacement parts

Use grease and adhesives that are equal to the specified substance.
Make sure the proper amount is applied.

4. Cleaning

For parts that require cleaning, such as optical pickups, tape deck heads, lenses and mirrors used in projection monitors, proper cleaning should be performed to restore their performances.

5. Shipping mode and Shipping screws

To protect products from damages or failures during transit, the shipping mode should be set or the shipping screws should be installed before shipment. Please be sure to follow this method especially if it is specified in this manual.

CONTENTS

1. SPECIFICATIONS 5
2. EXPLODED VIEWS AND PARTS LIST 8
   2.1 PACKING SECTION 8
   2.2 EXTERIOR SECTION 10
   2.3 FRONT PANEL SECTION 14
3. BLOCK DIAGRAM AND SCHEMATIC DIAGRAM (Refer to “Service Manual : ARP3276”) 16
   3.1 OVERALL BLOCK DIAGRAM 16
   3.2 R06 D-TUNER ASSY 18
   3.3 POWER SUPPLY UNIT 19
   3.4 POWER SUPPLY SIGNAL ROUTE 20
   3.5 PC CARD Module (PDP-R06XE Only) 21
   3.6 VOLTAGES 22
   3.7 WAVEFORMS 24
4. PCB CONNECTION DIAGRAM (Refer to “Service Manual : ARP3276”)
5. PCB PARTS LIST 25
6. ADJUSTMENT 38
   6.1 POSSIBLE CASES WHERE READJUSTMENT IS REQUIRED 38
   6.2 USING RS-232C COMMANDS 39
   6.3 SERVICING USING ONLY THE MEDIA RECEIVER 40
   6.4 SERVICE FACTORY MODE 41
   6.5 LIST OF RS-232C COMMANDS (MEDIA RECEIVER) 54
   6.6 OUTLINE OF COMMANDS 55
7. GENERAL INFORMATION 58
   7.1 DIAGNOSIS 58
      7.1.1 TROUBLESHOOTING 58
      7.1.2 DISASSEMBLY 70
   7.2 EXPLANATION 72
      7.2.1 PROCESSING IN ABNORMALITY 72
      7.2.2 POWER ON SEQUENCE 75
   7.3 PARTS 76
      7.3.1 IC 76
8. PANEL FACILITIES 107
   8.1 PDP-R06XE 107
   8.2 PDP-R06FE 109

1. SPECIFICATIONS

● PDP-R06XE model

Item			Media Receiver, Model: PDP-R06XE
Colour System		Analogue	PAL/SECAM/NTSC 3.58/NTSC 4.43/PAL 60
		Digital	PAL/SECAM
TV Function (Analogue)	Receiving System		B/G, D/K, I, L/L'
	Tuner	VHF/UHF	E2–E69ch, F2–F10ch, I21–I69ch, IR A–IR Jch
		CATV	Hyper-band, S1–S41ch
	Auto Channel Preset		99 ch, Auto Preset, Auto Label, Auto Sort
	STEREO		NICAM/A2
TV Function (Digital)	Receiving System		DVB-T (2K/8K COFDM)
	Tuner	VHF/UHF	VHF Band III (170 to 230 MHz) and UHF Band IV, V (470 to 862 MHz)
	Auto Channel Preset		999 ch, Auto Preset, Auto Label, Auto Sort
	STEREO		MPEG layer I/II, Dolby Digital
Terminals	Rear	INPUT1	SCART (AV in, RGB in, TV out)
		INPUT2	SCART (AV in/out, S-VIDEO in, AV link *1) Component Video
		INPUT3	SCART (AV in/out, S-VIDEO in, RGB in, AV link *1), HDMI in *2
		INPUT4	HDMI in *2
		Antenna	75 Ω Din Type for VHF/UHF in (Analogue)
			75 Ω Din Type for VHF/UHF in (Digital)
			75 Ω Din Type for VHF/UHF out (Digital)
	Front	INPUT5	S-VIDEO, AV in (Audio input is shared with PC INPUT.)
		PC	Analog RGB in
		PC CARD	PCMCIA Type II
AUDIO OUTPUT Terminal		(Rear)	AUDIO out (Fixed)
SUB WOOFER OUTPUT Terminal		(Rear)	Variable
PHONES OUTPUT Terminal		(Front)	16–32 Ω recommended
DIGITAL OUT Terminal			Digital audio output (Optical)
COMMON INTERFACE		(Rear)	CA Module
Power Requirement			220–240 V AC , 50/60 Hz, 25 W (0.7 W Standby: Aerial Power Off)
Dimensions			420 (W) x 90 (H) x 299 (D) mm
Weight			4.3 kg

∗**1:** Switchable

∗**2:** This conforms to HDMI1.1 and HDCP1.1.
HDMI (High Definition Multimedia Interface) is a digital interface that handles both video and audio using a single cable.
HDCP (High-bandwidth Digital Content Protection) is a technology used to protect copyrighted digital contents that use the Digital Visual Interface (DVI).

● Design and specifications are subject to change without notice.

● PDP-R06FE model

Item			Media Receiver, Model: PDP-R06FE
Colour System			PAL/SECAM/NTSC 3.58/NTSC 4.43/PAL 60
TV Function	Receiving System		B/G, D/K, I, L/L'
	Tuner	VHF/UHF	E2–E69ch, F2–F10ch, I21–I69ch, IR A–IR Jch
		CATV	Hyper-band, S1–S41ch
	Auto Channel Preset		99 ch, Auto Preset, Auto Label, Auto Sort
	STEREO		NICAM/A2
Terminals	Rear	INPUT1	SCART (AV in, RGB in, TV out)
		INPUT2	SCART (AV in/out, S-VIDEO in, AV link *1) Component Video
		INPUT3	SCART (AV in/out, S-VIDEO in, RGB in, AV link *1), HDMI in *2
		Antenna	75 Ω Din Type for VHF/UHF in
	Front	INPUT4	S-VIDEO, AV in
AUDIO OUTPUT Terminal		(Rear)	AUDIO out (FIX)
Power Requirement			220–240 V AC , 50/60 Hz, 16 W (0.4 W Standby)
Dimensions			420 (W) x 90 (H) x 299 (D) mm
Weight			3.5 kg

*1: Switchable

*2: This conforms to HDMI1.1 and HDCP1.1.
HDMI (High Definition Multimedia Interface) is a digital interface that handles both video and audio using a single cable.
HDCP (High-bandwidth Digital Content Protection) is a technology used to protect copyrighted digital contents that use the Digital Visual Interface (DVI).

● Design and specifications are subject to change without notice.

Trademarks

- FOCUS, WOW, SRS and **(●)**® symbol are trademarks of SRS Labs, Inc.
  FOCUS and SRS technologies are incorporated under license from SRS Labs, Inc.
- This product includes FontAvenue® fonts licensed by NEC Corporation.
  FontAvenue is a registered trademark of NEC Corporation.
- HDMI, the HDMI logo and High-Definition Multimedia Interface are trademarks or registered trademarks of HDMI Licensing LLC.
- The names of companies or institutions are trademarks or registered trademarks of the respective companies or institutions.

Accessories

Power cord (2 m)

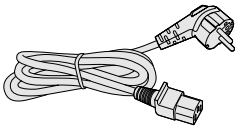

(For Europe, except UK and Eire)
(ADG1214)

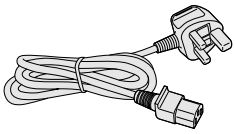

(For UK and Eire)

Only the power cord that is appropriate in your country or region is supplied.

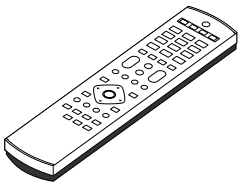

Remote control unit
(PDP-R06XE : AXD1509)
(PDP-R06FE : AXD1491)

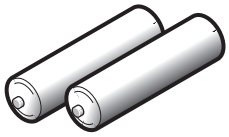

Dry Cell Battery (R6P, AA)

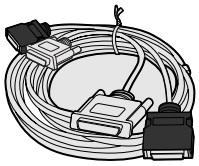

System cable (3 m)
(ADF1027)

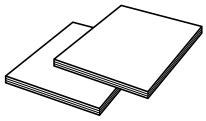

Two operating instructions

2. EXPLODED VIEWS AND PARTS LIST

NOTES:
- *Parts marked by "NSP" are generally unavailable because they are not in our Master Spare Parts List.*
- *The ⚠ mark found on some component parts indicates the importance of the safety factor of the part. Therefore, when replacing, be sure to use parts of identical designation.*
- *Screws adjacent to ▼ mark on product are used for disassembly.*
- *For the applying amount of lubricants or glue, follow the instructions in this manual. (In the case of no amount instructions, apply as you think it appropriate.)*

2.1 PACKING SECTION

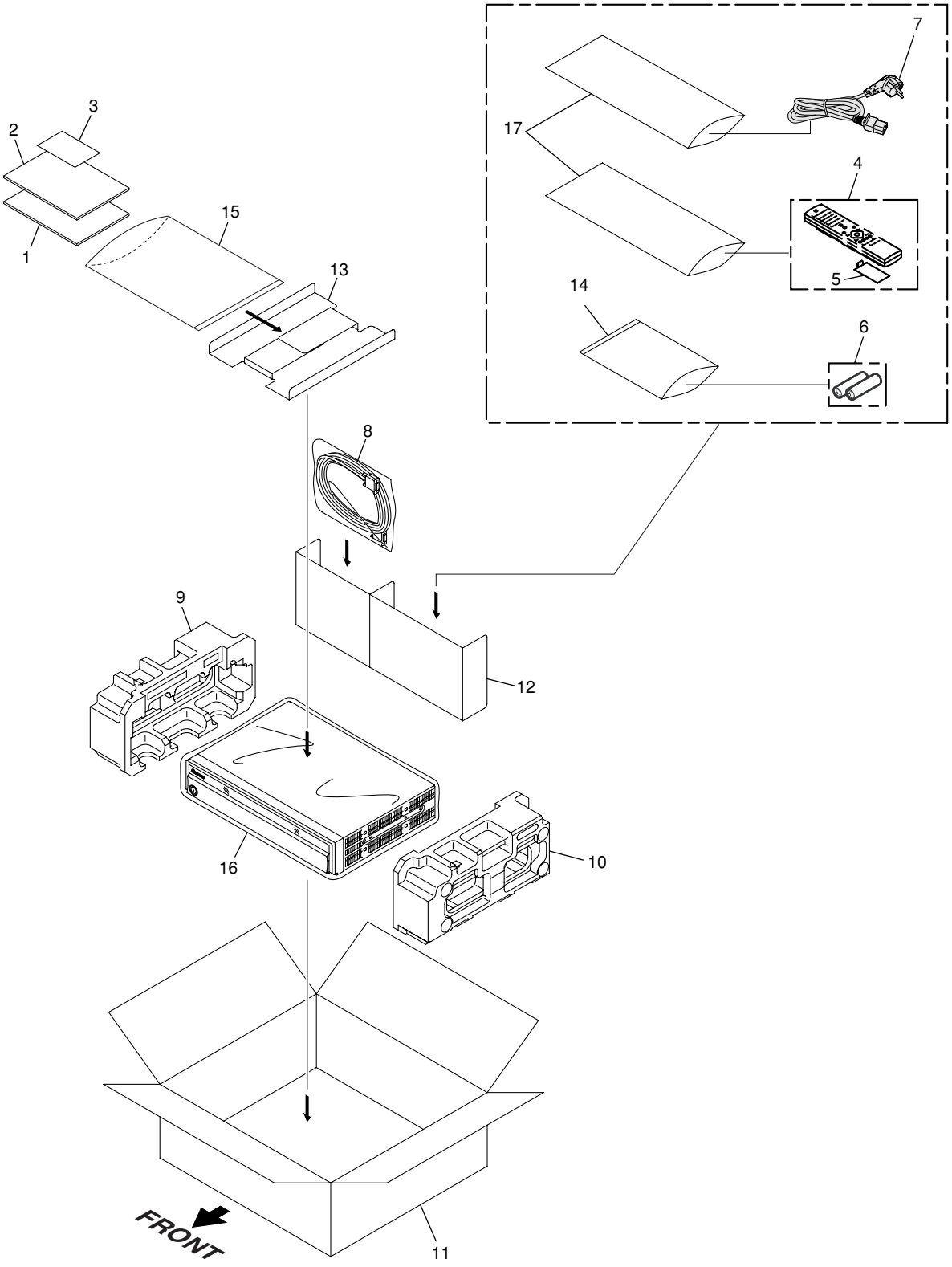

(1) PACKING SECTION PARTS LIST

Mark	No.	Description	Part No.
	1	Operating Instructions (Italian, Dutch, Spanish)	See Contrast table (2)
	2	Operating Instructions (English, French, German)	See Contrast table (2)
	3	Caution Card (10L)	ARM1276
	4	Remote Control Unit	See Contrast table (2)
	5	Battery Cover	See Contrast table (2)
NSP	6	Dry Cell Battery (R6P, AA)	See Contrast table (2)
⚠	7	Power Cord	ADG1214
	8	System Cable (3m)	ADF1027
	9	Pad L	See Contrast table (2)
	10	Pad R	See Contrast table (2)
	11	Carton	See Contrast table (2)
	12	Accessory Carton	See Contrast table (2)
	13	Manual Case	See Contrast table (2)
	14	Polyethylene Bag	AHG1337
NSP	15	Catalogue Bag	AHG1340
	16	Laminate Sheet	AHG1350
	17	Air Cap Bag	AHG1351

(2) CONTRAST TABLE

PDP-R06XE/WYVIXK5, PDP-R06FE/WYVI5 and WYVIXK5 are constructed the same except for the following:

Mark	No.	Symbol and Description	PDP-R06XE /WYVIXK5	PDP-R06FE /WYVI5	PDP-R06FE /WYVIXK5
	1	Operating Instructions (Italian, Dutch, Spanish)	ARC1548	ARC1543	ARC1544
	2	Operating Instructions (English, French, German)	ARE1400	ARE1395	ARE1396
	4	Remote Control Unit	AXD1509	AXD1491	AXD1491
	5	Battery Cover	AZN7919	AZN7424	AZN7424
NSP	6	Dry Cell Battery (R6P, AA)	VEM1017	VEM1031	VEM1017
	9	Pad L	AHA2445	AHA2443	AHA2445
	10	Pad R	AHA2446	AHA2444	AHA2446
	11	Carton EA	AHD3354	Not used	Not used
	11	Carton E1	Not used	AHD3353	Not used
	11	Carton E2	Not used	Not used	AHD3356
	12	Accessory Carton E	AHD3359	Not used	AHD3359
	12	Accessory Carton J	Not used	AHD3422	Not used
	13	Manual Case	AHD3424	AHD3427	AHD3424

2.2 EXTERIOR SECTION

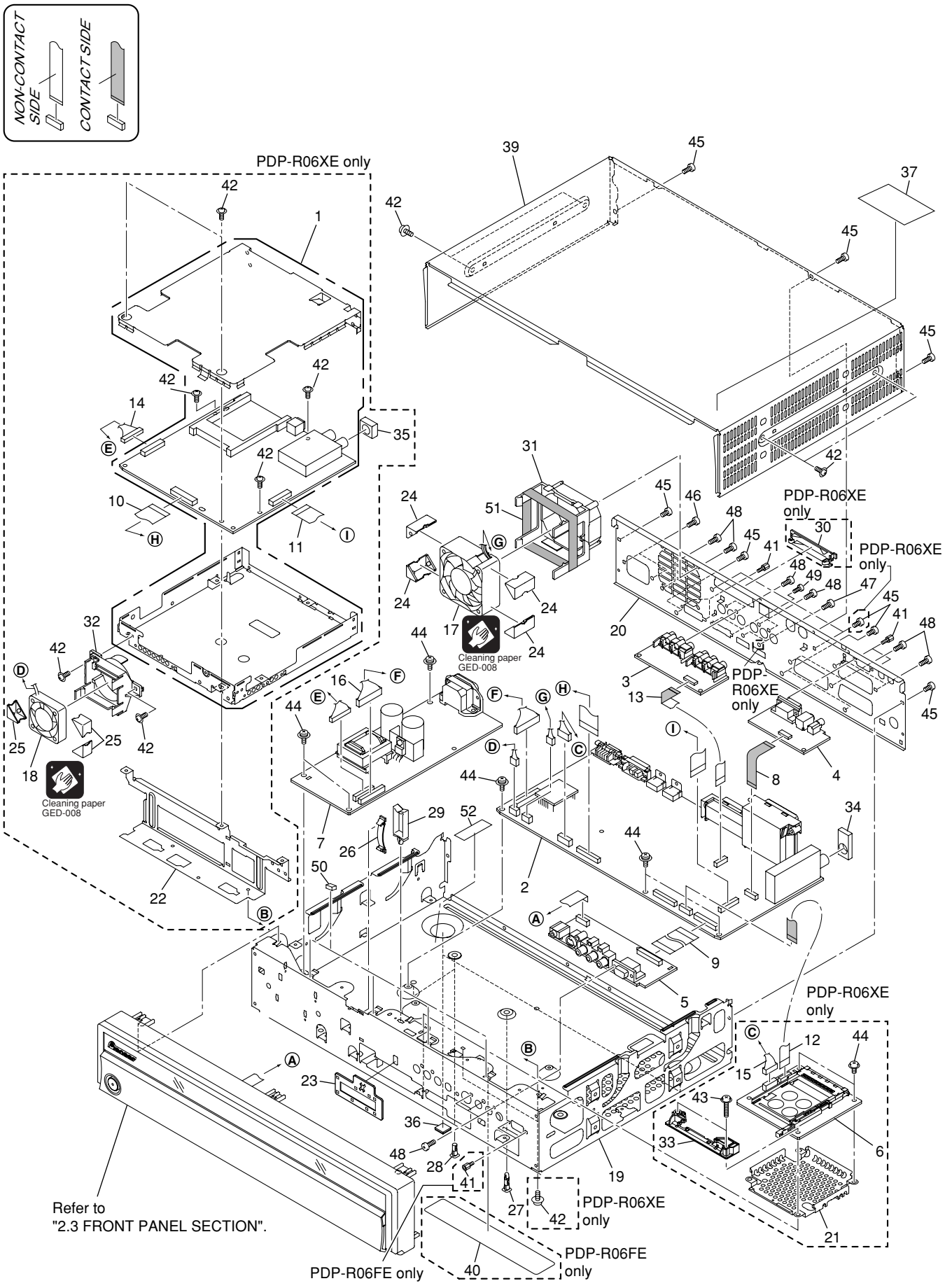

(1) EXTERIOR SECTION PARTS LIST

Mark	No.	Description	Part No.
	1	R06 D-TUNER Assy	See Contrast table (2)
⚠	2	MR MAIN Assy	See Contrast table (2)
	3	REAR IO Assy	See Contrast table (2)
	4	SR Assy	See Contrast table (2)
	5	FRONT Assy	See Contrast table (2)
	6	PC CARD Module	See Contrast table (2)
⚠	7	POWER SUPPLY Unit	AXY1114
	8	Flexible Cable (J208)	ADD1213
	9	Flexible Cable (J201)	ADD1305
	10	Flexible Cable (J202)	See Contrast table (2)
	11	Flexible Cable (J205)	See Contrast table (2)
	12	Flexible Cable (J206)	See Contrast table (2)
	13	Flexible Cable (J209)	ADD1310
	14	12P Housing Wire (J102)	See Contrast table (2)
	15	6P Housing Wire (J103)	See Contrast table (2)
	16	16P Housing Wire (J101)	ADX3191
⚠	17	Fan Motor (60 x 25L)	AXM1045
⚠	18	Fan Motor (42 x 10.5L)	See Contrast table (2)
	19	Base Chassis	See Contrast table (2)
	20	Terminal Panel	See Contrast table (2)
⚠	21	PC Shield	See Contrast table (2)
	22	Frame B	See Contrast table (2)
⚠	23	Shield Plate	See Contrast table (2)
	24	Floating Rubber 60	AEB1410
	25	Floating Rubber 40	See Contrast table (2)
	26	Flat Clamp	AEC1858
	27	Circuit Board Spacer	AEC1969
	28	Circuit Board Spacer	AEC2028
	29	Re-used Wire Saddle	AEC2038
	30	Rear Cover	See Contrast table (2)
	31	Fan Holder 60	AMR3451
	32	Fan Holder 40	See Contrast table (2)
	33	PC Guide	See Contrast table (2)
⚠	34	Gasket M	ANK1774
⚠	35	Gasket N	See Contrast table (2)
	36	Rubber Foot	VEB1349
	37	Caution Label	See Contrast table (2)
	38	WEEE Label L	AAX3198
	39	Metal Bonnet	See Contrast table (2)
	40	Bottom Cover	See Contrast table (2)
	41	HEX Head Screw	BBA1051
	42	Screw	ABZ30P060FTC
	43	Screw	See Contrast table (2)
	44	Screw	BBB30P080FTC
	45	Screw	BBZ30P060FTB
	46	Screw	BBZ30P100FTC
	47	Screw	BMZ30P060FTC
	48	Screw	BPZ30P080FTB
	49	Screw	PMZ26P060FTB
	50	Front Panel Spacer	AEB1429
	51	TERAOKA No.570F 16mm(W)	GYH1001

(2) CONTRAST TABLE

PDP-R06XE/WYVIXK5, PDP-R06FE/WYVI5 and WYVIXK5 are constructed the same except for the following:

Mark	No.	Symbol and Description	PDP-R06XE /WYVIXK5	PDP-R06FE /WYVI5	PDP-R06FE /WYVIXK5
	1	R06 D-TUNER Assy	AWE1304	Not used	Not used
⚠	2	MR MAIN Assy	AWV2219	AWV2221	AWV2221
	3	REAR IO Assy	AWW1036	AWW1040	AWW1040
	4	SR Assy	AWW1037	AWW1041	AWW1041
	5	FRONT Assy	AWW1038	AWW1042	AWW1042
	6	PC CARD Module	AXY1073	Not used	Not used
	10	Flexible Cable (J202)	ADD1306	Not used	Not used
	11	Flexible Cable (J205)	ADD1307	Not used	Not used
	12	Flexible Cable (J206)	ADD1308	Not used	Not used
	14	12P Housing Wire (J102)	ADX3138	Not used	Not used
	15	6P Housing Wire (J103)	ADX3139	Not used	Not used
⚠	18	Fan Motor (42 x 10.5L)	AXM1050	Not used	Not used
	19	Base Chassis J	ANA1891	Not used	Not used
	19	Base Chassis	Not used	ANA1868	ANA1868
	20	Terminal Panel EA	ANC2375	Not used	Not used
	20	Terminal Panel EB1	Not used	ANC2373	Not used
	20	Terminal Panel EB2	Not used	Not used	ANC2374
⚠	21	PC Shield	ANG2578	Not used	Not used
	22	Frame B	ANG2792	Not used	Not used

Mark	No.	Symbol and Description	PDP-R06XE /WYVIXK5	PDP-R06FE /WYVI5	PDP-R06FE /WYVIXK5
⚠	23	Shield Plate	ANG2838	Not used	Not used
	25	Floating Rubber 40	AEB1413	Not used	Not used
	30	Rear Cover	AMR3425	Not used	Not used
	32	Fan Holder 40	AMR3453	Not used	Not used
	33	PC Guide	AMR3468	Not used	Not used
⚠	35	Gasket N	ANK1776	Not used	Not used
	37	Caution Label	AAX3196	Not used	Not used
	39	Metal Bonnet	ANE1653	Not used	Not used
	39	Metal Bonnet FE	Not used	ANE1652	ANE1652
	40	Bottom Cover	Not used	AAX3223	AAX3221
	42	Screw	ABZ30P060FTC	ABZ30P060FTB	ABZ30P060FTB
	43	Screw	ABZ30P180FTC	Not used	Not used
	52	Label	AAX3247	Not used	Not used

A

• **Pasting up location WEEE Label (**No.38)

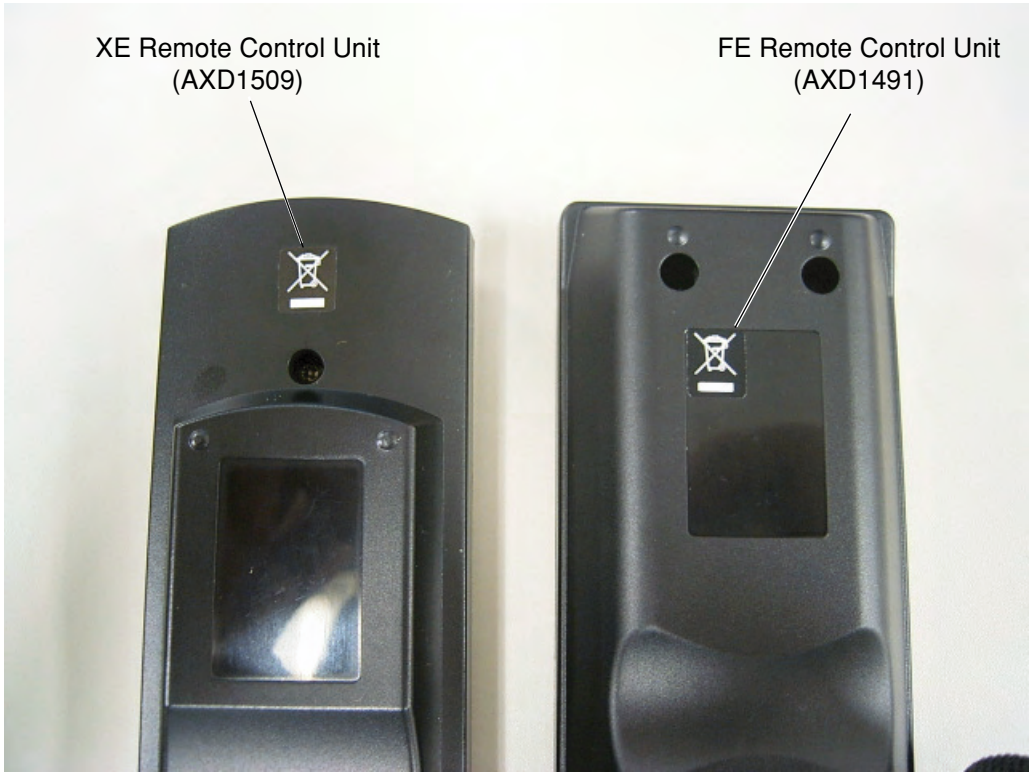

B

C

D

E

F

2.3 FRONT PANEL SECTION

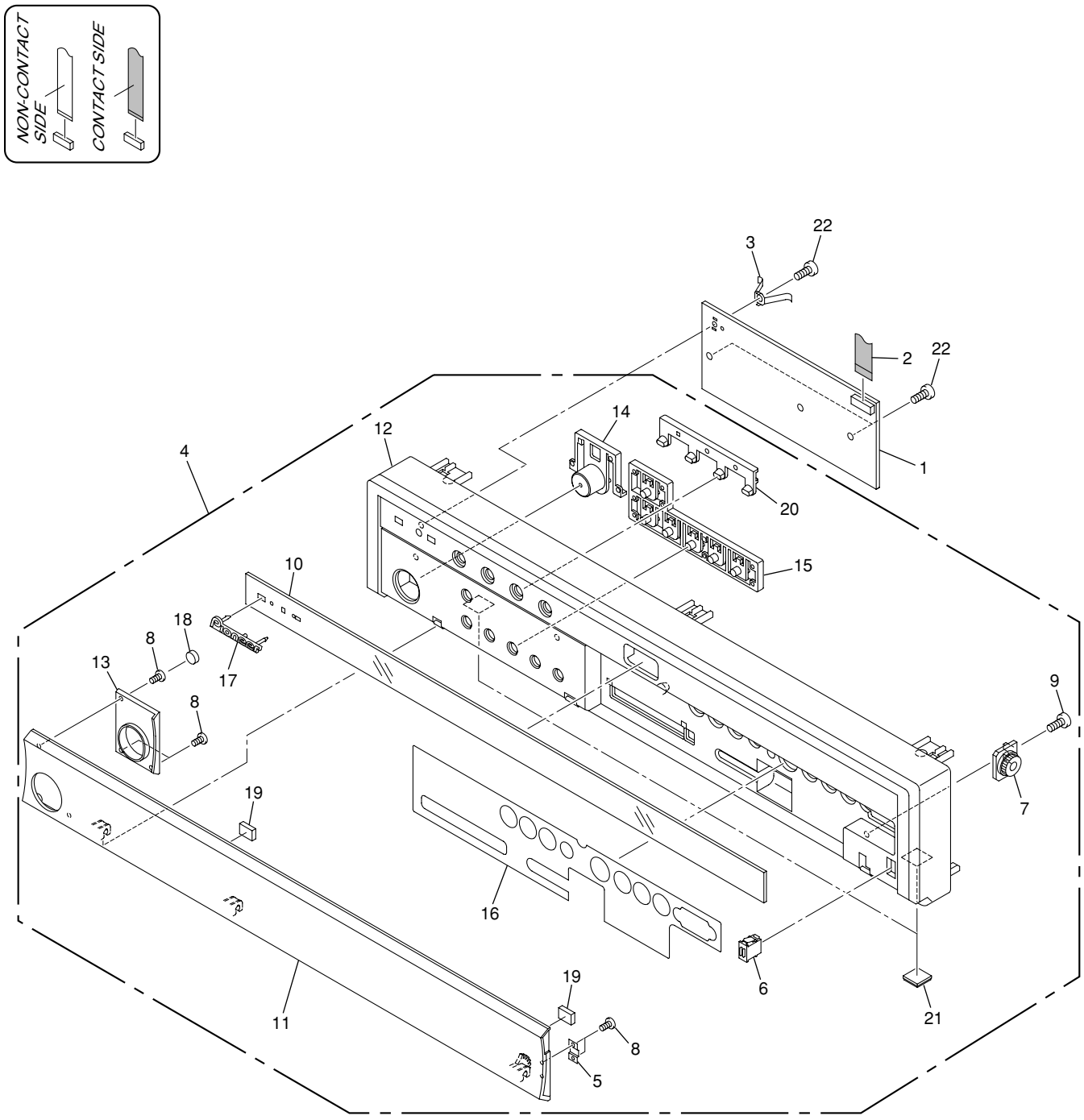

(1) FRONT PANEL SECTION PARTS LIST

Mark	No.	Description	Part No.
	1	LED Assy	See Contrast table (2)
	2	Flexible Cable (J207)	ADD1309
⚠	3	Earth Metal	BNG1336
	4	Front Panel Assy	See Contrast table (2)
	5	Magnet Catcher	ANG2820
	6	Magnet Holder Assy	AEC1077
	7	Gear Damper	AXA1019
	8	Screw (2 x 3.5)	ABA1329
	9	Screw	BPZ30P080FTB
	10	Indicator Panel	See Contrast table (2)
	11	Door	See Contrast table (2)
	12	Front Panel	See Contrast table (2)
	13	Escutcheon Ring	AAD4134
NSP	14	Power Button	AAD4135
NSP	15	Operation Button	AAD4136
	16	Sealing Sheet	See Contrast table (2)
	17	Pioneer Name Plate	AAM1107
	18	Door Cushion	AEB1412
	19	Door Cushion S	See Contrast table (2)
NSP	20	LED Lens	AMR3452
	21	Rubber Foot	VEB1349
	22	Screw	BPZ30P080FTB

(2) CONTRAST TABLE

PDP-R06XE/WYVIXK5, PDP-R06FE/WYVI5 and WYVIXK5 are constructed the same except for the following:

Mark	No.	Symbol and Description	PDP-R06XE /WYVIXK5	PDP-R06FE /WYVI5	PDP-R06FE /WYVIXK5
	1	LED Assy	AWW1039	AWW1043	AWW1043
	4	Front Panel Assy XE	AXG1030	Not used	Not used
	4	Front Panel Assy FE	Not used	AXG1029	AXG1029
	10	Indicator Panel (XE)	AAK2841	Not used	Not used
	10	Indicator Panel (FE)	Not used	AAK2840	AAK2840
	11	Door (XE)	AAN1479	Not used	Not used
	11	Door (FE)	Not used	AAN1478	AAN1478
	12	Front Panel (XE)	AMB2863	Not used	Not used
	12	Front Panel (FE)	Not used	AMB2862	AMB2862
	16	Sealing Sheet (XE)	AAL2665	Not used	Not used
	16	Sealing Sheet (FE)	Not used	AAL2664	AAL2664
	19	Door Cushion S	AEB1425	Not used	Not used
	19	Door Cushion S (UE)	Not used	AEB1426	AEB1426

3. BLOCK DIAGRAM

3.1 OVERALL BLOCK DIAGRAM

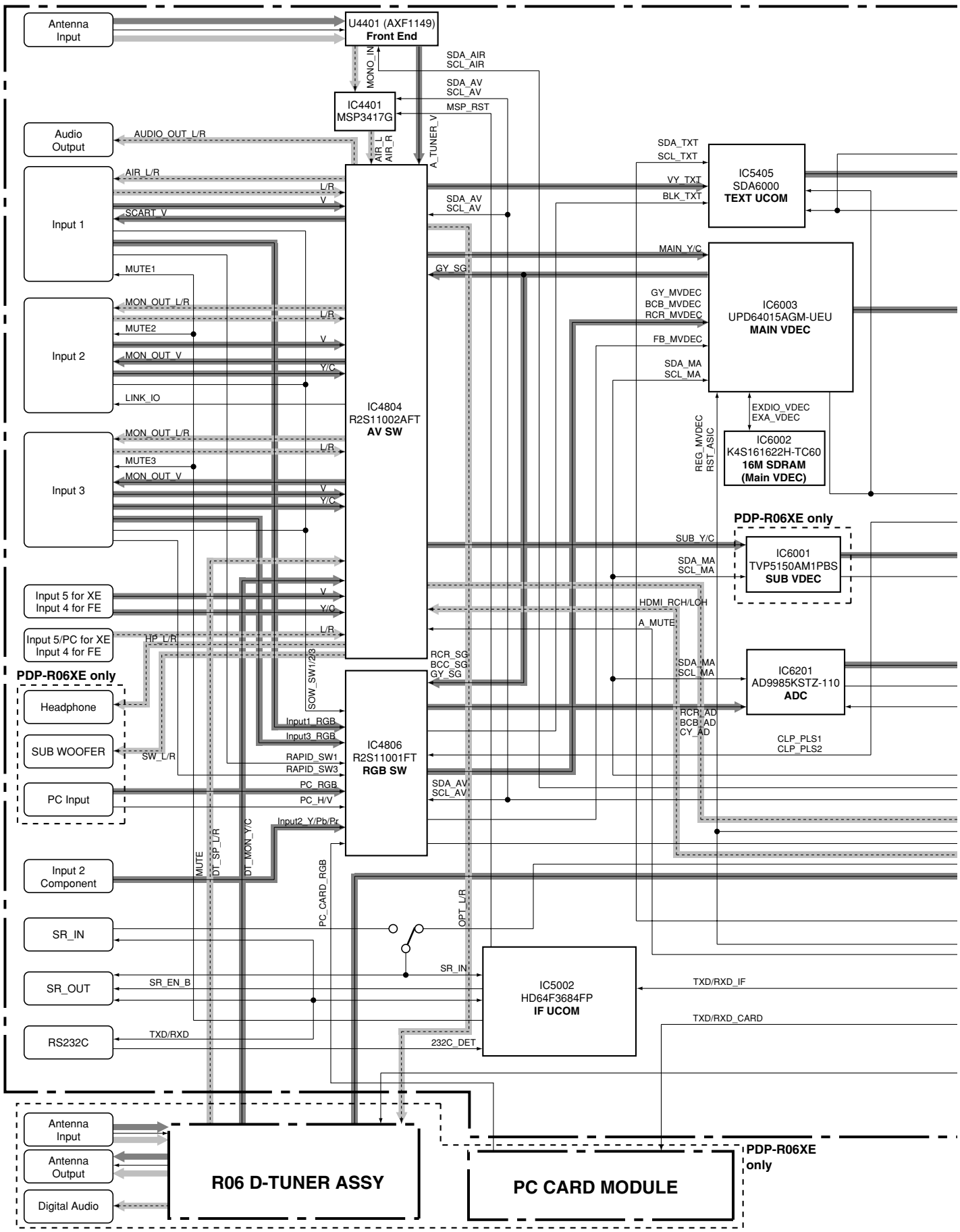

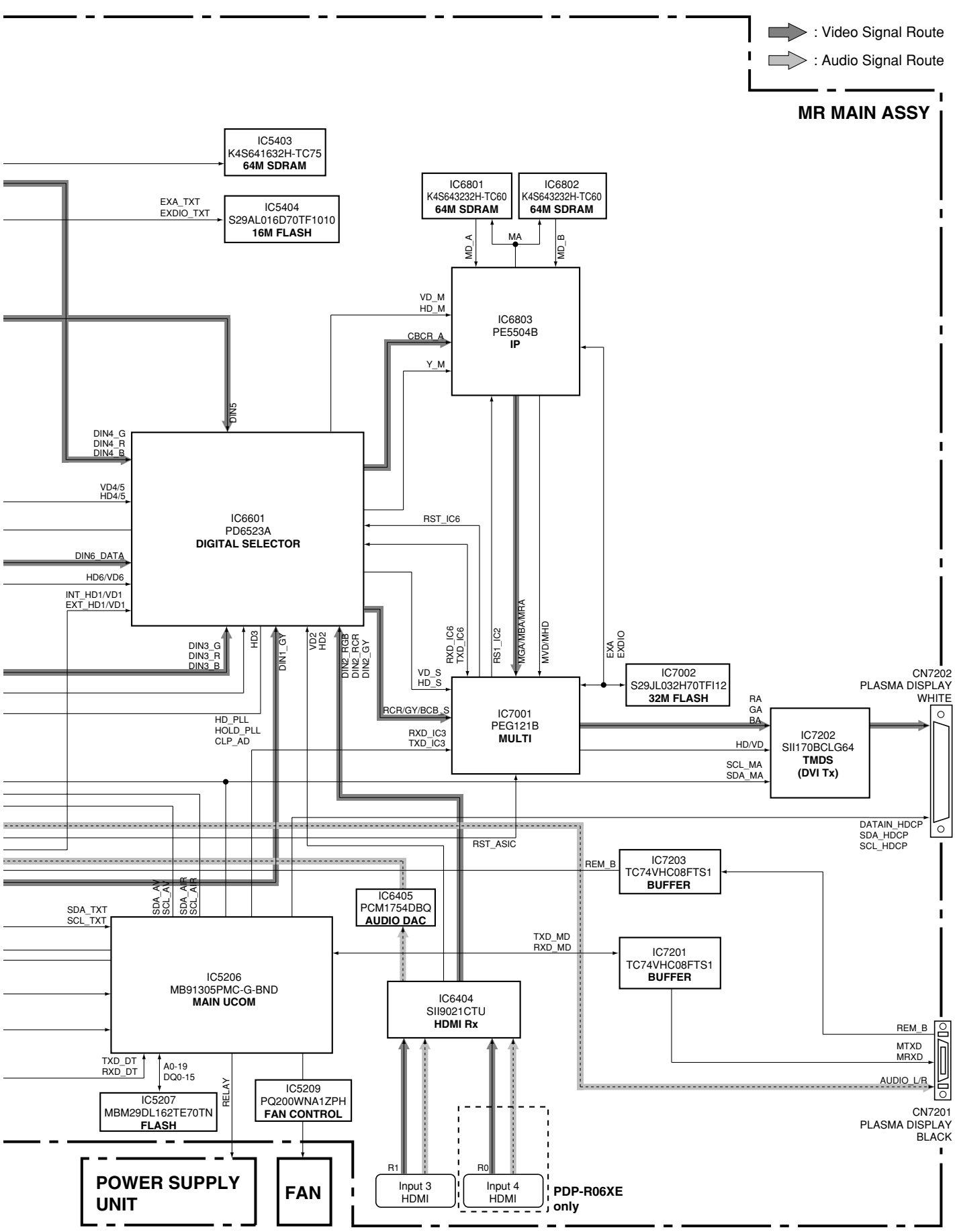
: Video Signal Route
: Audio Signal Route
MR MAIN ASSY
IC5403
K4S641632H-TC75
64M SDRAM
EXA_TXT
EXDIO_TXT
IC5404
S29AL016D70TF1010
16M FLASH
IC6801
K4S643232H-TC60
64M SDRAM
IC6802
K4S643232H-TC60
64M SDRAM
MD_A
MA
MD_B
VD_M
HD_M
CBCR_A
Y_M
IC6803
PE5504B
IP
DIN5
DIN4_G
DIN4_R
DIN4_B
VD4/5
HD4/5
IC6601
PD6523A
DIGITAL SELECTOR
RST_IC6
DIN6_DATA
HD6/VD6
INT_HD1/VD1
EXT_HD1/VD1
DIN3_G
DIN3_R
DIN3_B
HD3
DIN1_GY
VD2
HD2
DIN2_RGB
DIN2_RCR
DIN2_GY
RXD_IC6
TXD_IC6
RS1_IC2
MGA/MBA/MRA
MVD/MHD
EXA
EXDIO
IC7002
S29JL032H70TFI12
32M FLASH
VD_S
HD_S
RCR/GY/BCB_S
HD_PLL
HOLD_PLL
CLP_AD
RXD_IC3
TXD_IC3
IC7001
PEG121B
MULTI
RA
GA
BA
HD/VD
SCL_MA
SDA_MA
IC7202
SII170BCLG64
TMDS
(DVI Tx)
CN7202
PLASMA DISPLAY
WHITE
DATAIN_HDCP
SDA_HDCP
SCL_HDCP
RST_ASIC
REM_B
IC7203
TC74VHC08FTS1
BUFFER
SDA_AV
SCL_AV
SDA_AR
SCL_AR
IC6405
PCM1754DBQ
AUDIO DAC
SDA_TXT
SCL_TXT
TXD_MD
RXD_MD
IC7201
TC74VHC08FTS1
BUFFER
IC5206
MB91305PMC-G-BND
MAIN UCOM
IC6404
SII9021CTU
HDMI Rx
REM_B
MTXD
MRXD
AUDIO_L/R
TXD_DT
RXD_DT
A0-19
DQ0-15
RELAY
IC5207
MBM29DL162TE70TN
FLASH
IC5209
PQ200WNA1ZPH
FAN CONTROL
CN7201
PLASMA DISPLAY
BLACK
R1
R0
Input 3
HDMI
Input 4
HDMI
PDP-R06XE
only
POWER SUPPLY
UNIT
FAN

3.2 R06 D-TUNER ASSY

R06 D-TUNER ASSY

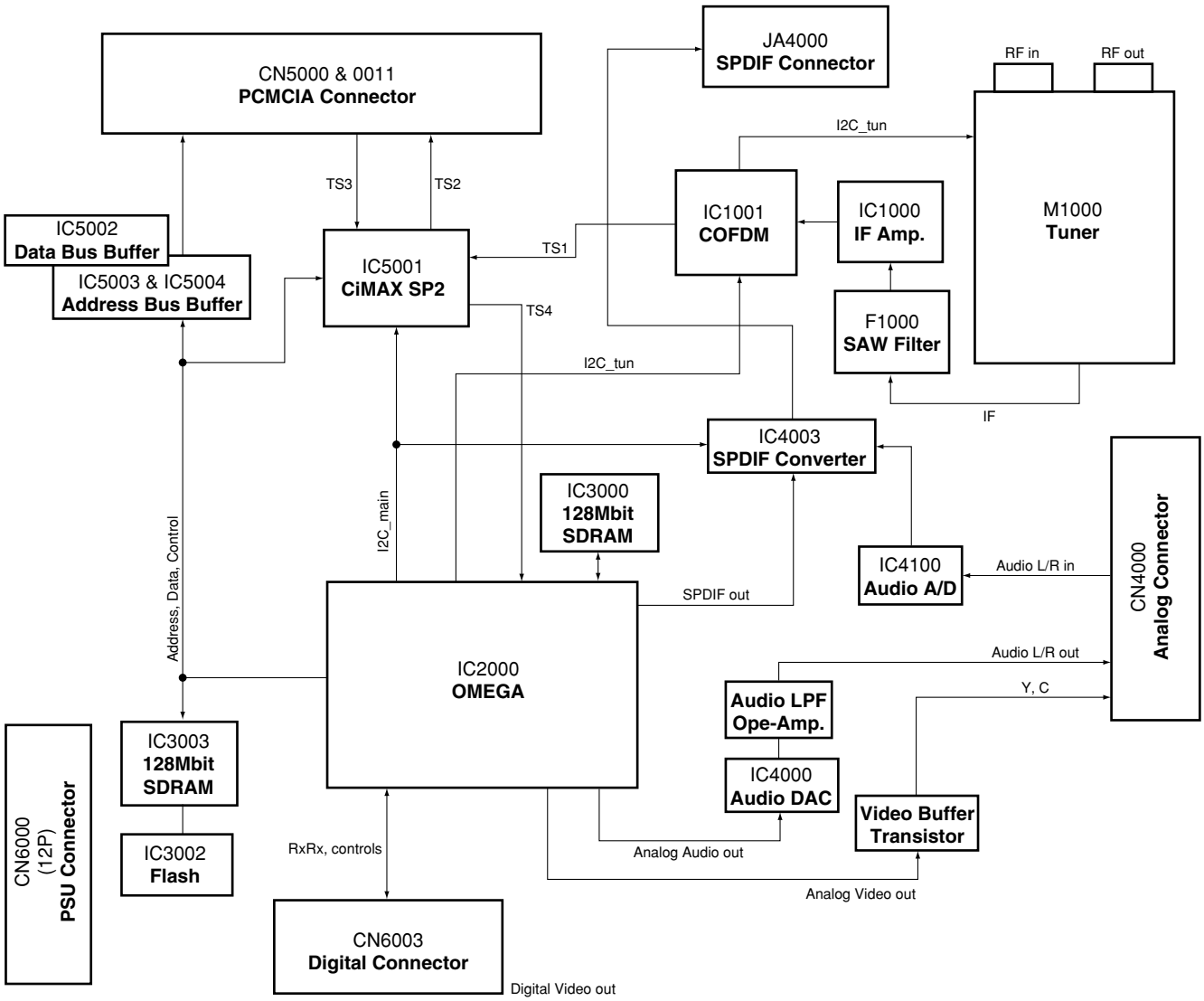

3.3 POWER SUPPLY UNIT

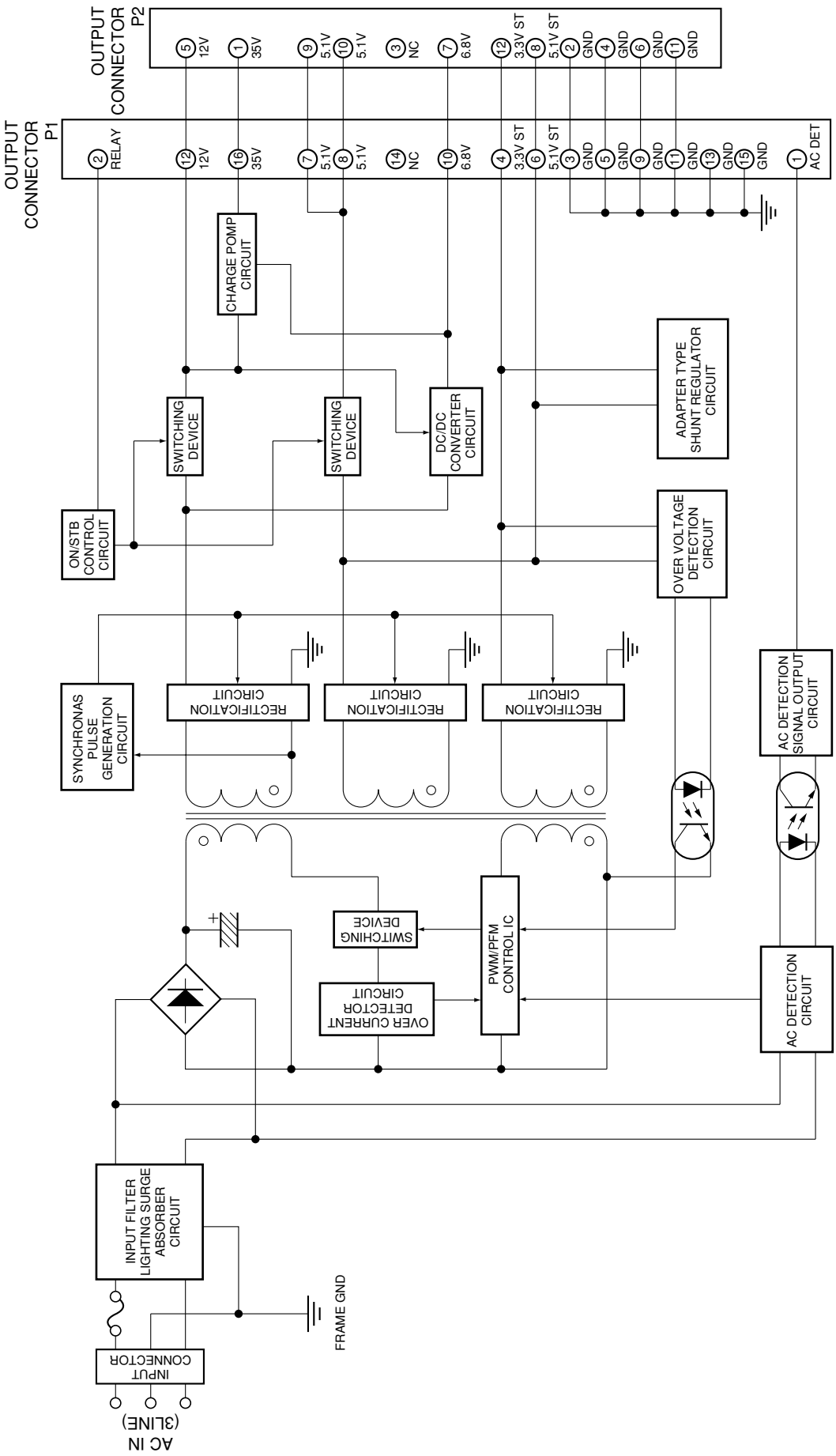

POWER SUPPLY UNIT

3.4 POWER SUPPLY SIGNAL ROUTE

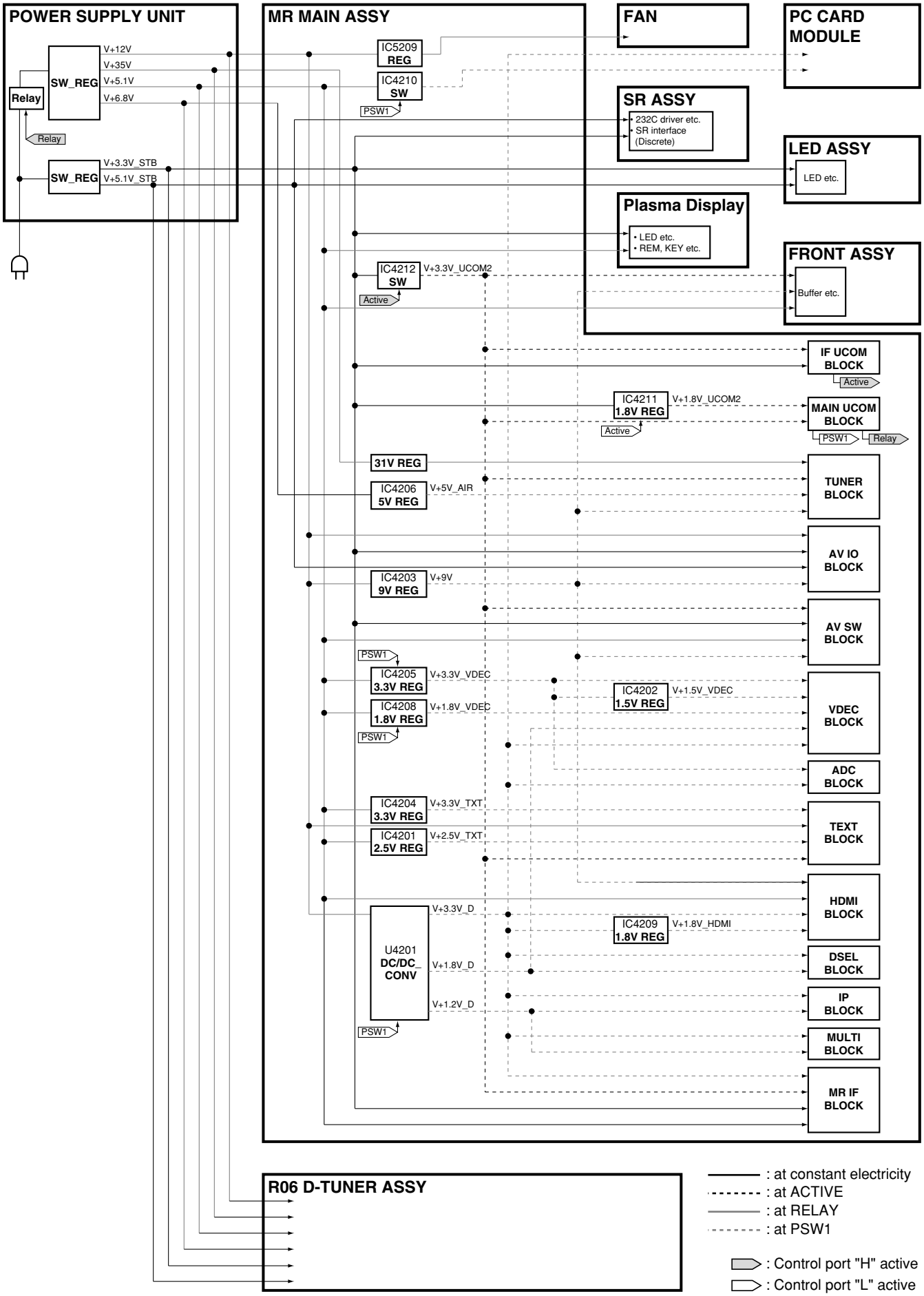

3.5 PC CARD Module (PDP-R06XE Only)

PC CARD MODULE

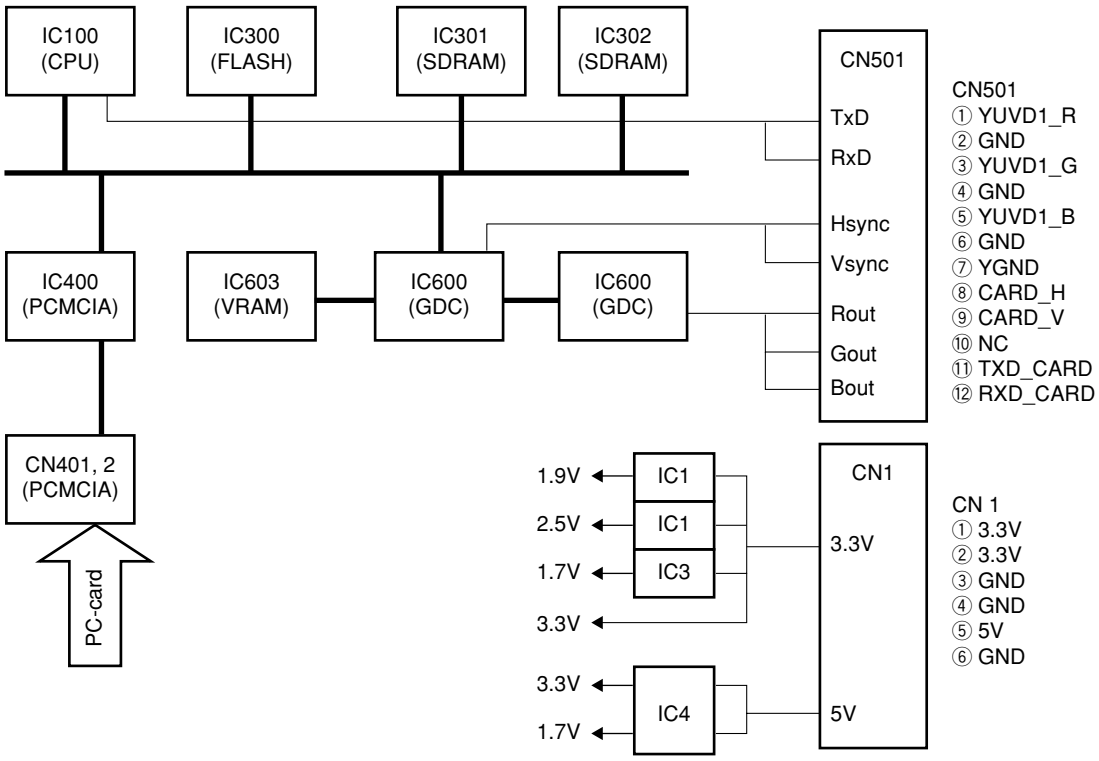

3.6 VOLTAGES

FRONT ASSY — **MR MAIN ASSY**

CN7804 (AKM1236)		Voltage	CN4001 (AKM1236)	
No.	Name	(V)	Name	No.
50	V+9V_A	9.0	V+9V_A	1
49	V+5V_A	5.0	V+5V_A	2
48	V+3_3V_UCOM2	3.4	V+3_3V_UCOM2	3
47	WE_RDM	0	WE_RDM	4
46	GND	0	GND	5
45	INPUT5_R	4.5	INPUT5_R	6
44	GND	0	GND	7
43	INPUT5_L	4.5	INPUT5_L	8
42	GND	0	GND	9
41	INPUT5_V	2.5	INPUT5_V	10
40	GND	0	GND	11
39	INPUT5_S2	0	INPUT5_S2	12
38	INPUT5_SPLUG	5.0	INPUT5_SPLUG	13
37	GND	0	GND	14
36	INPUT5_C	2.2	INPUT5_C	15
35	GND	0	GND	16
34	INPUT5_Y	2.5	INPUT5_Y	17
33	GND	0	GND	18
32	GND	0	GND	19
31	HP_L	2.1	HP_L	20
30	GND	0	GND	21
29	GND	0	GND	22
28	HP_R	2.1	HP_R	23
27	GND	0	GND	24
26	GND	0	GND	25
25	NC	0	NC	26
24	HP_PLUG	0	HP_PLUG	27
23	GND	0	GND	28
22	GND	0	GND	29
21	PC_R	2.5	PC_R	30
20	GND	0	GND	31
19	PC_B	2.5	PC_B	32
18	GND	0	GND	33
17	PC_G	2.5	PC_G	34
16	GND	0	GND	35
15	PC_H	0	PC_H	36
14	GND	0	GND	37
13	PC_V	0	PC_V	38
12	GND	0	GND	39
11	GND	0	GND	40
10	GND	0	GND	41
9	GND	0	GND	42
8	KEY_AD2	3.4	KEY_AD2	43
7	KEY_AD1	3.4	KEY_AD1	44
6	LED_REC	3.4	LED_REC	45
5	V+5_1V_STB	5.1	V+5_1V_STB	46
4	GND	0	GND	47
3	LED_OFF	3.4	LED_OFF	48
2	LED_ON	0	LED_ON	49
1	V+3_3V_STB	3.4	V+3_3V_STB	50

SR ASSY — **MR MAIN ASSY**

CN7601 (CKS3826)		Voltage	CN4008 (AKM1233)	
No.	Name	(V)	Name	No.
12	V+5_1_STB	5.1	V+5_1_STB	1
11	V+3_3_STB	3.4	V+3_3_STB	2
10	TXD	3.4	TXD	3
9	RXD	3.4	RXD	4
8	232C_DET	0	232C_DET	5
7	SR_EN_B	3.4	SR_EN_B	6
6	GND	0	GND	7
5	REM_B	3.4	REM_B	8
4	SR_IN	3.4	SR_IN	9
3	GND	0	GND	10
2	NC	-	NC	11
1	GND	0	GND	12

REAR IO ASSY — **MR MAIN ASSY**

CN7402 (CKS3826)		Voltage	CN4008 (AKM1233)	
No.	Name	(V)	Name	No.
12	INPUT2_Y	2.5	INPUT2_Y	1
11	INPUT2_PULG	0	INPUT2_PULG	2
10	V+5V_A	5.0	V+5V_A	3
9	INPUT2_PB	2.5	INPUT2_PB	4
8	GND	0	GND	5
7	INPUT2_PR	2.5	INPUT2_PR	6
6	GND	0	GND	7
5	AUDIO_OUT_L	0	AUDIO_OUT_L	8
4	GND	0	GND	9
3	AUDIO_OUT_R	0	AUDIO_OUT_R	10
2	GND	0	GND	11
1	SW_OUT	0	SW_OUT	12

MR MAIN ASSY — **POWER SUPPLY UNIT**

CN4006 (KM200NA16)		Voltage	CN101 (B16B-PH-K-S)	
No.	Name	(V)	Name	No.
16	V+35V	35.8	V+35V	16
15	GND	0	GND	15
14	V+17V	0	V+17V	14
13	GND	0	GND	13
12	V+12V	12.2	V+12V	12
11	GND	0	GND	11
10	V+6_8V	6.6	V+6_8V	10
9	GND	0	GND	9
8	V+5_1V	5.1	V+5_1V	8
7	V+5_1V	5.1	V+5_1V	7
6	V+5_1V_STB	5.1	V+5_1V_STB	6
5	GND	0	GND	5
4	V+3_3V_STB	3.4	V+3_3V_STB	4
3	GND	0	GND	3
2	RELAY	3.4	RELAY	2
1	AC_DET	3.4	AC_DET	1

R06 D-TUNER ASSY — **MR MAIN ASSY**

CN6003 (AKM1236)		Voltage	CN4004 (AKM1281)	
No.	Name	(V)	Name	No.
50	GND	0	GND	50
49	HD_DT	3.3	HD_DT	49
48	GND	0	GND	48
47	VD_DT	3.3	VD_DT	47
46	GND	0	GND	46
45	DE_DT	0	DE_DT	45
44	GND	0	GND	44
43	GND	0	GND	43
42	GND	0	GND	42
41	GND	0	GND	41
40	GND	0	GND	40
39	GND	0	GND	39
38	GND	0	GND	38
37	GND	0	GND	37
36	GND	0	GND	36
35	GND	0	GND	35
34	GND	0	GND	34
33	GND	0	GND	33
32	GND	0	GND	32
31	GND	0	GND	31
30	GND	0	GND	30
29	GND	0	GND	29
28	GND	0	GND	28
27	GND	0	GND	27
26	GND	0	GND	26
25	GND	0	GND	25
24	GND	0	GND	24
23	GND	0	GND	23
22	NC	–	NC	22
21	NC	–	NC	21
20	GND	0	GND	20
19	Y0_DT	0 to 3.3	Y0_DT	19
18	Y1_DT	0 to 3.3	Y1_DT	18
17	GND	0	GND	17
16	Y2_DT	0 to 3.3	Y2_DT	16
15	Y3_DT	0 to 3.3	Y3_DT	15
14	GND	0	GND	14
13	Y4_DT	0 to 3.3	Y4_DT	13
12	Y5_DT	0 to 3.3	Y5_DT	12
11	GND	0	GND	11
10	Y6_DT	0 to 3.3	Y6_DT	10
9	Y7_DT	0 to 3.3	Y7_DT	9
8	GND	0	GND	8
7	CLK_DT	0 to 3.3	CLK_DT	7
6	GND	0	GND	6
5	DT_FNC	3.3	DT_FNC	5
4	GND	0	GND	4
3	RXD_DT	3.3	RXD_DT	3
2	TXD_DT	3.3	TXD_DT	2
1	GND	0	GND	1

R06 D-TUNER ASSY — **POWER SUPPLY UNIT**

CN6000 (AKM1298)		Voltage (V)	CN102 (B12B-PH-K-S)	
No.	Name		Name	No.
1	V+35V	35.8	V+35V	1
2	GND	0	GND	2
3	V+17V	0	V+17V	3
4	GND	0	GND	4
5	V+12V	12.2	V+12V	5
6	GND	0	GND	6
7	V+6.8V	6.6	V+6.8V	7
8	V+5.1V_STB	5.1	V+5.1V_STB	8
9	V+5.1V	5.1	V+5.1V	9
10	V+5.1V	5.1	V+5.1V	10
11	GND	0	GND	11
12	V+3.3V_STB	3.4	V+3.3V_STB	12

FAN — **MR MAIN ASSY**

		Voltage (V)	CN4007 (AKM1274)	
No.	Name		Name	No.
–	–	6.5	FAN_VCC	1
–	–	0	FAN_NG2	2
–	–	0	GND	3

FAN — **MR MAIN ASSY**

		Voltage (V)	CN4009 (AKM1274)	
No.	Name		Name	No.
–	–	6.5	FAN_VCC	1
–	–	0	FAN_NG1	2
–	–	0	GND	3

FRONT ASSY — **LED ASSY**

CN7803 (AKM1233)		Voltage (V)	CN8001 (CKS3828)	
No.	Name		Name	No.
1	GND	0	GND	12
2	GND	0	GND	11
3	GND	0	GND	10
4	GND	0	GND	9
5	KEY_AD2	3.4	KEY_AD2	8
6	KEY_AD1	3.4	KEY_AD1	7
7	LED_REC	3.4	LED_REC	6
8	V+5_1V_STB	5.1	V+5_1V_STB	5
9	GND	0	GND	4
10	LED_R	3.4	LED_R	3
11	LED_G	0	LED_G	2
12	V+3_3V_STB	3.4	V+3_3V_STB	1

MR MAIN ASSY — **R06 D-TUNER ASSY**

CN4005 (AKM1303)		Voltage (V)	CN4000 (AKM1217)	
No.	Name		Name	No.
40	GND	0	GND	40
39	DT_DET	0	DT_DET	39
38	RST_DT	3.3	RST_DT	38
37	NOT_USE	0	NOT_USE	37
36	ANT_POW_EU	0	ANT_POW_EU	36
35	GND	0	GND	35
34	GND	0	GND	34
33	NOT_USE	0	NOT_USE	33
32	GND	0	GND	32
31	GND	0	GND	31
30	NOT_USE	0	NOT_USE	30
29	GND	0	GND	29
28	GND	0	GND	28
27	NOT_USE	0	NOT_USE	27
26	GND	0	GND	26
25	GND	0	GND	25
24	GND	0	GND	24
23	GND	0	GND	23
22	GND	0	GND	22
21	GND	0	GND	21
20	GND	0	GND	20
19	GND	0	GND	19
18	DT_MON_Y	1.8	DT_MON_Y	18
17	GND	0	GND	17
16	GND	0	GND	16
15	DT_MON_C	1.8	DT_MON_C	15
14	GND	0	GND	14
13	OPT_L	0	OPT_L	13
12	GND	0	GND	12
11	OPT_R	0	OPT_R	11
10	GND	0	GND	10
9	DT_SP_L	0	DT_SP_L	9
8	GND	0	GND	8
7	DT_SP_R	0	DT_SP_R	7
6	GND	0	GND	6
5	GND	0	GND	5
4	GND	0	GND	4
3	GND	0	GND	3
2	GND	0	GND	2
1	GND	0	GND	1

MR MAIN ASSY — **PC CARD MODULE**

CN4003 (AKM1233)		Voltage (V)	CN501 (HFW12S-2STE1)	
No.	Name		Name	No.
1	RXD_CARD	3.3	RXD_CARD	12
2	TXD_CARD	3.3	TXD_CARD	11
3	NC	0	NC	10
4	PC_CARD_V	3.3	PC_CARD_V	9
5	PC_CARD_H	3.3	PC_CARD_H	8
6	GND	0	GND	7
7	GND	0	GND	6
8	PC_CARD_B	0	PC_CARD_B	5
9	GND	0	GND	4
10	PC_CARD_G	0	PC_CARD_G	3
11	GND	0	GND	2
12	PC_CARD_R	0	PC_CARD_R	1

MR MAIN ASSY — **PC CARD MODULE**

CN4002 (AKM1277)		Voltage (V)	CN1 (BBB-PH-SM3)	
No.	Name		Name	No.
6	GND	0	GND	6
5	V+5V_CARD	5.0	V+5V_CARD	5
4	GND	0	GND	4
3	GND	0	GND	3
2	V+3_3V_CARD	3.3	V+3_3V_CARD	2
1	V+3_3V_CARD	3.3	V+3_3V_CARD	1

3.7 WAVEFORMS

Note : The encircled numbers denote measuring point in the schematic diagram.
Refer to service manual (ARP3276).

MR MAIN ASSY

1 TP4403 (A_TUNER_V)
(A_TUNER_V)
V : 500mV/div H : 20µsec/div

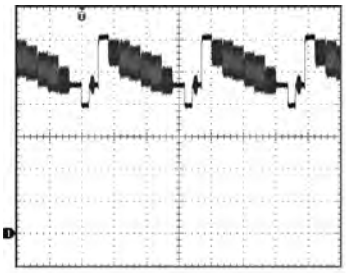

2 TP4409 (AIR_HS)
(AIR_HS)
V : 1V/div H : 20µsec/div

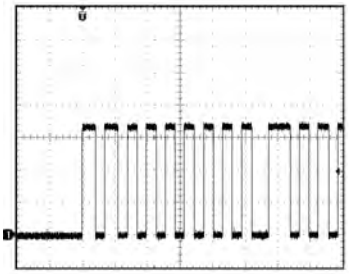

3 IC4804-pin 57
(A_TUNER_V)
V : 1V/div H : 20µsec/div

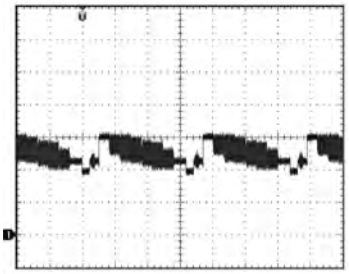

4 TP4815 (Component Y)
(GY_AD)
V : 500mV/div H : 10µsec/div

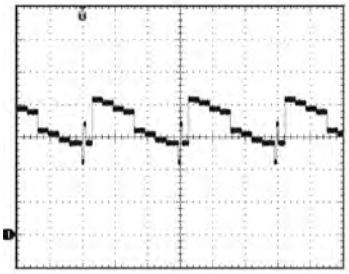

5 TP4816 (Component Cb)
(BCB_AD)
V : 500mV/div H : 10µsec/div

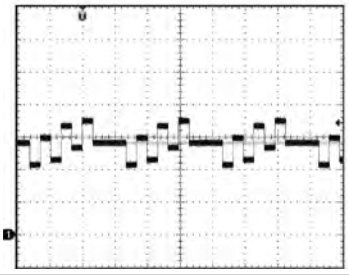

6 TP4817 (Component Cr)
(RCR_AD)
V : 500mV/div H : 10µsec/div

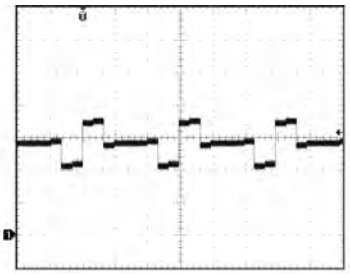

7 TP4823 (EXT_HD1)
(EXT_HD1)
V : 20mV/div H : 10µsec/div

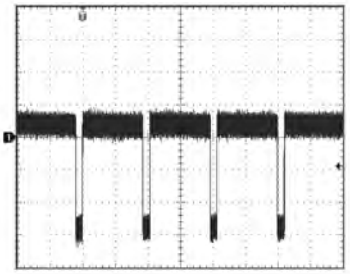

8 TP4822 (EXT_VD1)
(EXT_VD1)
V : 1V/div H : 4msec/div

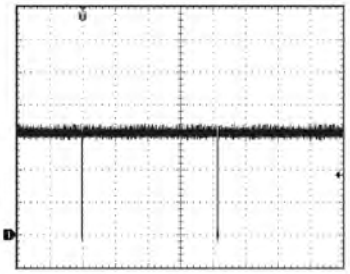

9 TP4818 (SCART G)
(GY_MVDEC)
V : 500mV/div H : 20µsec/div

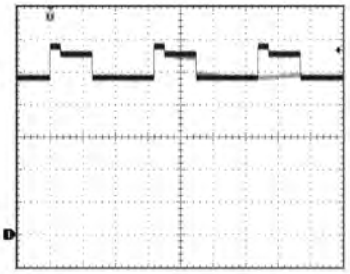

10 TP4819 (SCART B)
(BCB_MVDEC)
V : 500mV/div H : 20µsec/div

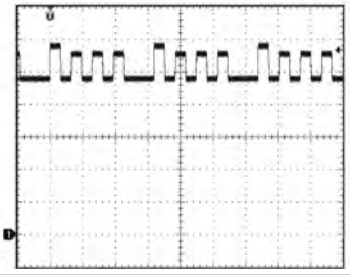

11 TP4820 (SCART R)
(RCR_MVDEC)
V : 500mV/div H : 20µsec/div

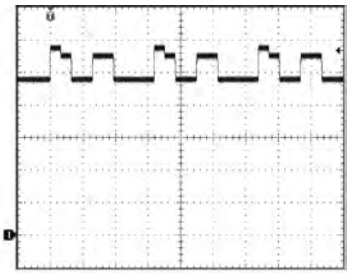

12 IC4804-pin 49 (MAIN_Y)
(MAIN_Y)
V : 500mV/div H : 20µsec/div

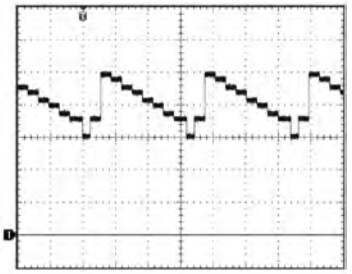

13 IC4804-pin 47 (MAIN_C)
(MAIN_C)
V : 500mV/div H : 20µsec/div

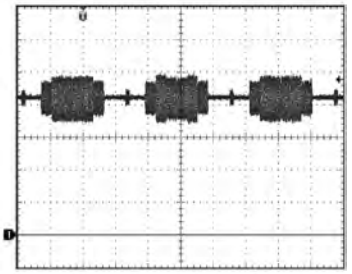

14 IC4804-pin 45 (SUB_Y)
(SUB_Y)
V : 500mV/div H : 20µsec/div

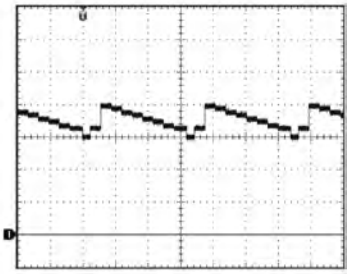

15 IC4804-pin 42 (SUB_C)
(SUB_C)
V : 500mV/div H : 20µsec/div

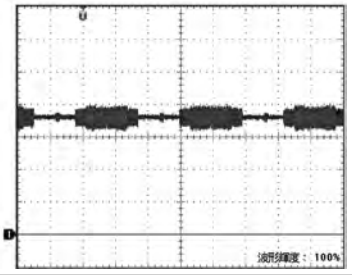

5. PCB PARTS LIST

NOTES:
- *Parts marked by "NSP" are generally unavailable because they are not in our Master Spare Parts List.*
- *The ⚠ mark found on some component parts indicates the importance of the safety factor of the part. Therefore, when replacing, be sure to use parts of identical designation.*
- *When ordering resistors, first convert resistance values into code form as shown in the following examples.*

Ex.1 When there are 2 effective digits (any digit apart from 0), such as 560 ohm and 47k ohm (tolerance is shown by J=5%, and K=10%).

560 Ω → 56 x 10^1 → 561 ····· RD1/4PU 5 6 1 J
47k Ω → 47 x 10^3 → 473 ····· RD1/4PU 4 7 3 J
0.5 Ω → R50 ····· RN2H R 5 0 K
1 Ω → 1R0 ····· RS1P 1 R 0 K

Ex.2 When there are 3 effective digits (such as in high precision metal film resistors).

5.62k Ω → 562 x 10^1 → 5621 ····· RN1/4PC 5 6 2 1 F

■ LIST OF HOLE PCB ASSEMBLIES

Mark	Symbol and Description	PDP-R06XE /WYVIXK5	PDP-R06FE /WYVI5	PDP-R06FE /WYVIXK5
	1..R06 D-TUNER ASSY	AWE1304	Not used	Not used
⚠	1..MR MAIN ASSY	AWV2219	AWV2221	AWV2221
NSP⚠	1..MR FUKUGO ASSY	AWV2220	AWV2222	AWV2222
	2..REAR IO ASSY	AWW1036	AWW1040	AWW1040
	2..SR ASSY	AWW1037	AWW1041	AWW1041
	2..FRONT ASSY	AWW1038	AWW1042	AWW1042
	2..LED ASSY	AWW1039	AWW1043	AWW1043
⚠	1..POWER SUPPLY UNIT	AXY1114	AXY1114	AXY1114

■ FOR PDP-R06XE

Mark	No.	Description	Part No.
		R06 D-TUNER ASSY	
		[TUNER BLOCK]	
		SEMICONDUCTORS	
	IC1001		STV0361L
	IC1000		UPC3221GV
	Q1001		2SC2412K
	Q1002		DTC124EUA
	Q1003,Q1004		RK7002
	D1001		1SS355
⚠	D1000		SM15T6V8A
		COILS AND FILTERS	
	L1002		LCYAR82J2520
	F1001,F1003-F1010	FERRITE BEAD	VTF1091
	F1012-F1014	FERRITE BEAD	VTF1091
	F1100,F1101	FERRITE BEAD	VTF1091
	F1202-F1204	FERRITE BEAD	VTF1091
	F1000	SAW FILTER	XTF1002
	L1200	CHIP FERRITE BEAD	XTX1001
	L1004	CHIP FERRITE BEAD	XTX1003
	L1000	CHIP BALUN TRANS	XTX1005
		CAPACITORS	
	C1054		BCG1050
	C1028,C1038,C1042,C1046,C1051		CCG1205
	C1043,C1044		CCSRCJ3R0C50
	C1020		CEHVKW100M16
	C1019		CEHVKW100M50
	C1004,C1055		CEHVKW101M6R3
	C1010		CEHVKW2R2M50
	C1102		CEHVKW331M6R3
	C1018,C1027,C1029,C1050		CEHVKW470M16
	C1056,C1057		CEHVKW470M16
	C1015		CKSRYB102K50
	C1013,C1021,C1040,C1041,C1045		CKSRYB103K50
	C1001-C1003,C1017,C1022		CKSRYB104K16
	C1025,C1026,C1030-C1035,C1037		CKSRYB104K16
	C1039,C1049,C1053,C1058-C1062		CKSRYB104K16
	C1036		CKSRYB105K10
		RESISTORS	
	All Resistors		RS1/16S###J
		OTHERS	
⚠	FU1200	CHIP FUSE (0.25A)	XEK1003
	X1100	CRYSTAL (27MHz)	XSS1010
		[DEMUX BLOCK]	
		SEMICONDUCTORS	
	IC2001		SN74LVU04APW
	IC2000		STI5517DWAL
	IC2002		TC74VHC08FTS1
	Q2000		2SC4081
	D2000		DA204U
	D2002		HVU307
	D2005,D2009		RB501V-40
	D2001		UDZS8R2(B)
	VA2002		AVR-M1608C120MT2AB

Mark No.	Description	Part No.
	COILS AND FILTERS	
	F2000-F2003 FERRITE BEAD	VTF1091
	L2000 CHIP FERRITE BEAD	XTX1003
	CAPACITORS	
	C2014,C2016	CCSRCH100D50
	C2000,C2026,C2030	CCSRCH101J50
	C2009	CCSRCH330J50
	C2011,C2012	CCSRCH390J50
	C2007	CCSRCH471J50
	C2032-C2034,C2036	CEHVKW470M16
	C2008,C2017,C2020,C2021	CKSRYB102K50
	C2013	CKSRYB105K10
	C2001	CKSRYB471K50
	C2002,C2003,C2005,C2006	CKSRYF104Z16
	C2018,C2019,C2022-C2025,C2028	CKSRYF104Z16
	C2035,C2037-C2041,C2043-C2045	CKSRYF104Z16
	C2047,C2048	CKSRYF104Z16
	C2015	CKSRYF105Z10
	C2027,C2029,C2042,C2046	CKSRYF223Z50
	C2004	CKSRYF474Z16
	RESISTORS	
	R2010,R2018,R2042	RAB4C103J
	R2070,R2071	RAB4CQ220J
	Other Resistors	RS1/16S###J
	OTHERS	
	X2001 CRYSTAL	ASS1172
	X2000 CRYSTAL (27MHz)	BSS1112
	[MEMORY BLOCK]	
	SEMICONDUCTORS	
	IC3000,IC3003	K4S281632F-UC75
	COILS AND FILTERS	
	L3005 CHIP FERRITE BEAD	XTX1001
	L3003 CHIP FERRITE BEAD	XTX1003
	CAPACITORS	
	C3010	CEHVKW470M16
	C3000,C3003,C3007,C3008,C3012	CKSRYF104Z16
	C3017,C3020-C3022	CKSRYF104Z16
	C3001,C3002,C3004,C3014,C3015	CKSRYF223Z50
	C3018,C3019,C3023,C3024	CKSRYF223Z50
	RESISTORS	
	R3004-R3014	RAB4CQ470J
	Other Resistors	RS1/16S###J
	[AV BLOCK]	
	SEMICONDUCTORS	
	IC4000	CS4334-KS
	IC4003	CS8406CZZ
	IC4100	PCM1803DB
	IC4002	RC4558D
	IC4001	SN74LVU04APW
	Q4001,Q4002	2SC4081
	COILS AND FILTERS	
	F4000,F4100 CHIP FERRITE BEAD	VTF1091

Mark No.	Description	Part No.
	CAPACITORS	
	C4000,C4002	CCG1205
	C4010,C4011,C4042	CCSRCH101J50
	C4008,C4009	CCSRCH121J50
	C4007,C4013	CCSRCH220J50
	C4019,C4102-C4104,C4108-C4113	CEHVKW100M16
	C4004	CEHVKW2R2M50
	C4012,C4022,C4023,C4029,C4039	CEHVKW470M16
	C4006	CKSRYB102K50
	C4001,C4014,C4032,C4033,C4038	CKSRYB103K50
	C4040,C4041	CKSRYB105K10
	C4003,C4005,C4017,C4018,C4021	CKSRYF104Z16
	C4024,C4043,C4105-C4107	CKSRYF104Z16
	RESISTORS	
	R4042,R4045,R4046	RS1/16S2000F
	Other Resistors	RS1/16S###J
	OTHERS	
	CN4000 40P CONNECTOR	AKM1217
	JA4000 OPTICAL OUT MODULE	GP1FM513TZ
	X4000 CRYSTAL (12.288MHz)	XSS1006
	[COMMON-INTERFACE BLOCK]	
	SEMICONDUCTORS	
	IC5001	CIMAXSP2L
	IC5000	ST890CDR
	IC5002	TC74LCX245FTS1
	IC5003,IC5004	TC74LCX373FT
	Q5000	2SC4081
	Q5001	DTA143EUA
	Q5002	DTC124EUA
	CAPACITORS	
	C5005,C5100	CEHVKW470M16
	C5001	CKSRYB105K10
	C5003,C5004,C5006,C5008-C5013	CKSRYF104Z16
	RESISTORS	
	R5014,R5019,R5022,R5024,R5030	RAB4CQ470J
	R5032,R5036-R5038,R5045-R5050	RAB4CQ470J
	Other Resistors	RS1/16S###J
	OTHERS	
	CN5000 PCMCIA CONNECTOR	XKP1003
	[POWER BLOCK]	
	SEMICONDUCTORS	
	IC6002	BA05FP
	IC6003	FPF2002
	IC6001	M5291FP
	IC6200	TC74LCX245FTS1
	Q6006	2SB1188
	Q6100	2SC4081
	Q6003,Q6005,Q6010	DTA143EUA
	Q6001,Q6009,Q6011,Q6200	DTC124EUA
	Q6008	TPC8209
	D6003,D6100-D6102	1SS355
	D6001	RSX201L-30
	D6103	UDZS30(B)

Mark	No.	Description	Part No.
COILS AND FILTERS			
	L6000		LCYAR82J2520
	F6000	CHIP FERRITE BEAD	VTF1091
	L6001,L6100,L6101	CHIP INDUCTOR (33UH)	XTH1001
CAPACITORS			
	C6027		CCSRCH101J50
	C6010		CCSRCH331J50
	C6004		CEHVKW100M50
	C6017,C6028,C6036,C6042,C6044		CEHVKW101M6R3
	C6031		CEHVKW2R2M50
	C6000,C6026,C6104-C6106		CEHVKW331M6R3
	C6001,C6011,C6013-C6015,C6019		CEHVKW470M16
	C6023,C6100		CEHVKW470M16
	C6022		CKSRYB105K10
	C6003,C6005,C6006,C6012,C6018		CKSRYF104Z16
	C6020,C6021,C6025,C6029,C6030		CKSRYF104Z16
	C6033,C6038,C6102,C6200		CKSRYF104Z16
	C6002,C6035		CKSRYF223Z50
	C6008,C6016		CKSRYF474Z16
RESISTORS			
	R6031		RAB4C221J
	R6012-R6014		RAB4C2R2J
	R6204,R6205		RAB4CQ101J
	Other Resistors		RS1/16S###J
OTHERS			
	CN6003	50P CONNECTOR	AKM1236
	CN6000	PHP CONNECTOR 12P	AKM1298
[PC CARD BLOCK]			
SEMICONDUCTORS			
	IC3002		XYW1005
OTHERS			
	16-18	SCREW	ABZ30P060FTC
	11	PCMCIA EJECTOR	ANG2673
	12-15	SCREW	PMZ20P100FNI
	9	TOP CAN	XNG1002

MR MAIN ASSY

Mark	No.	Description	Part No.
OTHERS			
	FRONT END (EU)		AXF1149
	DD CON UNIT		AXY1117
[BOARD IF BLOCK]			
SEMICONDUCTORS			
	Q4003,Q4004		2SA1586
	Q4001		DTA124EUA
	Q4002		TPC6104
	D4001-D4005		1SS355
CAPACITORS			
	C4002		CKSRYB105K10
	C4003,C4004		CKSSYB104K10
RESISTORS			
	R4021-R4023		RS1/10S0R0J
	R4007		RS2LMF8R2J
	Other Resistors		RS1/16S###J
OTHERS			
	CN4004	50P CONNECTOR	AKM1201
	CN4003,CN4008,CN4010	12P FFC CONNECTOR	AKM1233
	CN4001	50P CONNECTOR	AKM1236
	CN4007,CN4009	PH CONNECTOR 3P	AKM1274
	CN4002	PH CONNECTOR 6P	AKM1277
	CN4005	40P CONNECTOR	AKM1303
[REG BLOCK]			
SEMICONDUCTORS			
	IC4210,IC4212		BD6522F
	IC4208,IC4211		MM1661JH
	IC4202		NCP1117ST15
	IC4209		NCP1117ST18
	IC4201		PQ025ENA1ZPH
	IC4204,IC4205		PQ033ENA1ZPH
	IC4206		PQ050DNA1ZPH
	IC4203		PQ090DNA1ZPH
	Q4201,Q4203		DTC124EUA
	D4201-D4206,D4208,D4209,D4211		1SS355
COILS AND FILTERS			
	L4201,L4202	INDUCTOR	BTH1111
⚠	L4203-L4206	CHIP FERRITE BEAD	BTX1042
⚠	F4201-F4205,F4207	EMI FILTER	CCG1162
CAPACITORS			
	C4201,C4206,C4209,C4215,C4218 (10/6.3V)		ACG7046
	C4220,C4233,C4235,C4240,C4250 (10/6.3V)		ACG7046
	C4253,C4257,C4260,C4263 (10/6.3V)		ACG7046
	C4213 (100UF/16V)		ACH1394
	C4210,C4244,C4269		ACH1429
	C4273		CCSSCH101J50
	C4205,C4216,C4219,C4221,C4222		CEHVKW101M6R3
	C4224,C4228,C4238,C4264,C4267		CEHVKW101M6R3
	C4226		CEHVKW220M16
	C4214		CKSRYB104K16
	C4203,C4217,C4223		CKSRYB105K10
	C4229,C4237,C4252		CKSSYB104K10
	C4232,C4234		CKSSYB471K50
	C4202,C4204,C4207,C4212,C4227		CKSSYF104Z16
	C4236,C4251,C4261,C4262,C4268		CKSSYF104Z16
	C4211,C4225,C4256		DCH1165
RESISTORS			
	All Resistors		RS1/16S###J
[TUNER BLOCK]			
SEMICONDUCTORS			
	IC4401		MSP3417G
	Q4404		2SA1586
	Q4401,Q4402		2SC4116
	Q4414		DTA124EUA
	Q4410,Q4413,Q4415		DTC124EUA

Mark No.	Description	Part No.
	Q4407,Q4408	HN1A01FU
	Q4405	HN1B04FU
	Q4409	HN1C01FU
A	D4401	UDZS33(B)
	D4403	UDZS8R2(B)
	COILS AND FILTERS	
	L4401-L4403 CHIP COIL	BTH1119
	L4405,L4406	LCTAW150J2520
	L4407	LCTAW4R7J2520
	L4404	LCTAW8R2J2520
	F4401,F4402 FERRITE BEAD	VTF1080
	CAPACITORS	
	C4404,C4407,C4415 (10/6.3V)	ACG7046
	C4416,C4429,C4459 (10/6.3V)	ACG7046
B	C4424 (3.3UF/50V)	ACH1385
	C4449	CCSRCH680J50
	C4442	CCSRCJ3R0C50
	C4417,C4418	CCSSCH100D50
	C4431	CCSSCH101J50
	C4450	CCSSCH121J50
	C4456	CCSSCH181J50
	C4448	CCSSCH470J50
	C4428,C4443	CCSSCH560J50
	C4441	CCSSCH5R0D50
	C4409,C4423	CEHVKW100M16
C	C4421	CEHVKW101M6R3
	C4422	CEHVKW470M16
	C4420	CKSRYB332K50
	C4401,C4411,C4413	CKSRYF104Z50
	C4403,C4406,C4410,C4430,C4440	CKSSYB102K50
	C4444,C4455,C4461	CKSSYB102K50
	C4408,C4439,C4446	CKSSYB103K16
	C4438,C4454	CKSSYB472K25
	C4402,C4405,C4425,C4426,C4432	CKSSYF104Z16
	C4434,C4435,C4447,C4451,C4460	CKSSYF104Z16
D	C4465	CKSSYF104Z16
	C4414,C4437,C4445	DCH1165
	RESISTORS	
	All Resistors	RS1/16S###J
	OTHERS	
	X4401 CRYSTAL (18.432MHz)	ASS1196
	[AV IO BLOCK]	
	SEMICONDUCTORS	
	Q4614,Q4615,Q4626,Q4639	2SA1586
E	Q4641,Q4642,Q4645,Q4646	2SA1586
	Q4602-Q4605,Q4607,Q4608	2SC4116
	Q4618-Q4620,Q4622-Q4624,Q4629	2SC4116
	Q4632-Q4637,Q4643	2SC4116
	Q4611,Q4612,Q4640	2SD2114K
	Q4606,Q4616,Q4621,Q4627,Q4631	DTA124EUA
	Q4610	DTA143EUA
	Q4613,Q4617,Q4628	DTC124EUA
	Q4601,Q4609,Q4625,Q4630,Q4638	HN1A01FU
	Q4644	HN1C01FU
F	D4602,D4607,D4611,D4612,D4615	1SS301
	D4621	1SS301
	D4606,D4626	1SS355

Mark No.	Description	Part No.
	COILS AND FILTERS	
	L4602,L4604,L4606,L4608	LCTAW1R0J2520
	L4611,L4612	LCTAW1R0J2520
	L4601,L4603,L4605,L4607	LCTAW560J2520
	L4609,L4610	LCTAW560J2520
	SWITCHES AND RELAYS	
	S4601	ASH1029
	CAPACITORS	
	C4601,C4605,C4620 (10/6.3V)	ACG7046
	C4621,C4634,C4636 (10/6.3V)	ACG7046
	C4662 (100UF/16V)	ACH1394
	C4607,C4611,C4617,C4619,C4624	CCG1205
	C4628,C4643,C4649,C4661	CCG1205
	C4602,C4623,C4639	CEHAT471M10
	C4606,C4608,C4609,C4612	CKSRYB105K10
	C4615,C4616,C4626,C4629	CKSRYB105K10
	C4631-C4633,C4641,C4642	CKSRYB105K10
	C4645,C4646,C4650,C4652-C4654	CKSRYB105K10
	C4644	CKSRYB224K10
	C4610,C4613,C4627,C4630	CKSSYB102K50
	C4647,C4648	CKSSYB102K50
⚠	C4655-C4660	CKSSYB102K50
	C4604,C4614,C4622,C4637,C4651	CKSSYF104Z16
	C4603,C4625,C4638	DCH1165
	RESISTORS	
	R4608,R4670,R4696	RS1/10S121J
	R4601,R4644,R4645,R4658,R4686	RS1/10S151J
	R4734,R4735	RS1/10S151J
	R4630-R4632,R4643,R4675,R4681	RS1/16S75R0F
	R4715-R4717,R4733	RS1/16S75R0F
	Other Resistors	RS1/16S###J
	OTHERS	
	JA4601 RGB CONNECTOR (DUAL)	AKP1265
	JA4602 RGB CONNECTOR	AKP1266
	[AV SW BLOCK]	
	SEMICONDUCTORS	
	IC4807	BH3544F
	IC4805	NJM12904V
	IC4806	R2S11001FT
	IC4804	R2S11002AFT
	IC4809	TC7WH123FU
	Q4801,Q4802,Q4804-Q4806,Q4809	2SA1586
	Q4818,Q4820,Q4822,Q4823	2SA1586
	Q4808,Q4811-Q4813,Q4817,Q4819	2SC4116
	Q4821	2SC4116
	Q4814	DTA124EUA
	Q4815	DTC124EUA
	Q4807	HN1B04FU
	D4802,D4806	1SS301
	D4801	1SS355
	CAPACITORS	
	C4916 (4.7U/10V)	ACG1122
	C4821,C4835,C4871 (10/6.3V)	ACG7046
	C4875,C4896,C4923 (10/6.3V)	ACG7046
	C4877,C4880	CCSRCH181J50
	C4859	CCSRCH331J50

Mark No.	Description	Part No.
C4861		CCSRCH680J50
C4885,C4888		CCSRCH681J50
C4822,C4862		CEHVKW101M6R3
C4898		CEHVKW470M6R3
C4802,C4805,C4806,C4808		CKSRYB105K10
C4813,C4814,C4820,C4833,C4834		CKSRYB105K10
C4836,C4838-C4841,C4847,C4848		CKSRYB105K10
C4850,C4851,C4878,C4879,C4889		CKSRYB105K10
C4894,C4895,C4899-C4905,C4922		CKSRYB105K10
C4837		CKSRYB474K10
C4853-C4858,C4860,C4865		CKSSYB103K16
C4869,C4870,C4890-C4893		CKSSYB103K16
C4807,C4809		CKSSYB104K10
C4801,C4819,C4845,C4846,C4864		CKSSYF104Z16
C4873,C4881,C4884,C4886,C4887		CKSSYF104Z16
C4917-C4921,C4924,C4925		CKSSYF104Z16
C4844,C4863,C4866,C4872,C4876		DCH1165
C4882,C4883		DCH1165
RESISTORS		
R4975,R4999		RD1/2LMF120J
R4784,R4786		RS1/16S1800F
R4785,R4787,R4792,R4794,R4796		RS1/16S5600F
R4791,R4793,R4795		RS1/16S75R0F
R4857-R4860,R4944,R4985		RS1/16SS3301F
Other Resistors		RS1/16S###J
[IF UCOM BLOCK]		
SEMICONDUCTORS		
IC5002		HD64F3684FP
IC5003		PST9230N
IC5001		TC74VHC08FTS1
IC5004		TC7W126FU
Q5005		DTA124EUA
Q5001		DTC124EUA
CAPACITORS		
C5007,C5008		CCSSCH180J50
C5001		CEHVKW101M6R3
C5010		CKSSYB472K25
C5002-C5005,C5009,C5012		CKSSYF104Z16
RESISTORS		
R5002,R5004,R5007,R5025,R5026		RAB4CQ103J
Other Resistors		RS1/16S###J
OTHERS		
X5002	CERAMIC RESONATOR	ASS1168
X5001	CRYSTAL	ASS1172
[MAIN UCOM BLOCK]		
SEMICONDUCTORS		
IC5202		BR24L64F-W
IC5206		MB91305PMC-G-BND
IC5207		MBM29DL162TE70TN
IC5210		MM1522XU
IC5209		PQ200WNA1ZPH
IC5203		PST3628UR
IC5201,IC5204		TC74VHC125FTS1
Q5202		2SJ461A
Q5204		DTC124EUA
Q5201		SM6K2
D5203		1SS355
D5201		SML-311UT
CAPACITORS		
C5235		CCSRCH221J50
C5244,C5245		CCSSCH120J50
C5217,C5218,C5237,C5239-C5243		CCSSCH470J50
C5246-C5249		CCSSCH470J50
C5238		CEHVKW100M35
C5201		CEHVKW101M6R3
C5261-C5263		CKSSYB102K50
C5216,C5233		CKSSYB103K16
C5215		CKSSYB472K25
C5253		CKSSYF103Z50
C5202-C5214,C5219,C5222-C5232		CKSSYF104Z16
C5234,C5252		CKSSYF104Z16
C5236		DCH1165
RESISTORS		
R5262,R5268		ACN1248
R5205,R5213		RAB4CQ101J
R5283		RS1/16S1001F
R5282		RS1/16S4701F
R5273		RS1/16S8201F
Other Resistors		RS1/16S###J
OTHERS		
CN5202	50P CONNECTOR	AKM1201
K5201,K5202	TEST PIN	AKX9002
X5201	CERAMIC RESONATOR	ASS1178
[TEXT UCOM BLOCK]		
SEMICONDUCTORS		
IC5403		K4S641632H-TC75
IC5404		S29AL016D70TFI010
IC5405		SDA6000
IC5407		TC74LCX125FT
IC5402		TC7SH04FUS1
IC5406		TC7W126FU
Q5401,Q5406		DTA124EUA
Q5403,Q5407		DTC124EUA
D5404		1SS355
D5401		UDZS12(B)
D5402		UDZS3R0(B)
D5403		UDZS3R9(B)
COILS AND FILTERS		
⚠F5402,F5403	EMI FILTER	CCG1162
CAPACITORS		
C5412,C5438,C5453 (10/6.3V)		ACG7046
C5422,C5423		CCSSCH200J50
C5404		CKSSYB102K50
C5403		CKSSYB103K16
C5445		CKSSYB104K10
C5405,C5406,C5408,C5410,C5413		CKSSYF104Z16
C5416,C5418,C5420,C5425,C5427		CKSSYF104Z16
C5429-C5431,C5434,C5435,C5440		CKSSYF104Z16
C5442,C5446,C5449,C5451,C5454		CKSSYF104Z16
C5456,C5458,C5460,C5476		CKSSYF104Z16

Mark	No.	Description	Part No.
		RESISTORS	
	R5409		ACN1251
	R5404,R5428,R5429,R5434,R5435		BCN1067
A	R5439,R5457,R5476		RAB4CQ103J
	R5432,R5460		RAB4CQ680J
	Other Resistors		RS1/16S###J
		OTHERS	
	X5401	CRYSTAL	ASS1193
		[VDEC BLOCK]	
		SEMICONDUCTORS	
	IC6002		K4S161622H-TC60
	IC6001		TVP5150AM1PBS
B	IC6003		UPD64015AGM-UEU
	Q6002		DTA124EUA
		COILS AND FILTERS	
	⚠F6001,F6002	EMI FILTER	CCG1162
	⚠F6008-F6011,F6022	EMI FILTER	CCG1162
		CAPACITORS	
	C6056,C6088 (10/6.3V)		ACG7046
	C6059,C6060		CCSSCH100D50
	C6078,C6083		CCSSCH8R0D50
	C6048-C6050		CKSRYB105K10
	C6062,C6069,C6070,C6074,C6080		CKSSYB103K16
C			
	C6046,C6051,C6052,C6054,C6058		CKSSYB104K10
	C6063,C6064,C6066,C6067		CKSSYB104K10
	C6072,C6073,C6075-C6077		CKSSYB104K10
	C6081,C6082,C6084,C6085		CKSSYB104K10
	C6001-C6008,C6012-C6028		CKSSYF104Z16
	C6031-C6045,C6047,C6053,C6055		CKSSYF104Z16
	C6061,C6065,C6068,C6071,C6079		CKSSYF104Z16
	C6090,C6091		CKSSYF104Z16
		RESISTORS	
D	R6010,R6062,R6068,R6072		ACN1246
	R6065,R6073		BCN1067
	R6007,R6023,R6030,R6071		RAB4CQ220J
	R6063		RS1/16SS1001D
	R6038,R6039,R6049		RS1/16SS2000F
	R6054		RS1/16SS2201D
	R6052		RS1/16SS6200D
	Other Resistors		RS1/16S###J
		OTHERS	
	X6001	CRYSTAL	ASS1189
	X6002	CRYSTAL	ASS1191
E			
		[ADC BLOCK]	
		SEMICONDUCTORS	
	IC6201		AD9985KSTZ-110
		COILS AND FILTERS	
	⚠F6201,F6204	EMI FILTER	CCG1162
		CAPACITORS	
	C6205,C6209		CKSSYB104K10
	C6207,C6210,C6218		CKSSYB473K16
F	C6202		CKSSYB822K16
	C6201		CKSSYB823K10
	C6203,C6204,C6206,C6208		CKSSYF104Z16

Mark	No.	Description	Part No.
	C6211,C6212,C6215-C6217		CKSSYF104Z16
	C6222-C6224		CKSSYF104Z16
		RESISTORS	
	R6213,R6218,R6223		BCN1067
	R6202		RS1/16SS2701F
	Other Resistors		RS1/16S###J
		[HDMI BLOCK]	
		SEMICONDUCTORS	
	IC6402,IC6403		BR24L02FJ-W
	IC6405		PCM1754DBQ
	IC6404		SII9021CTU
	Q6416,Q6417		2SA1586
	Q6412,Q6414		DTA124EUA
	Q6413,Q6415		DTC124EUA
	Q6402,Q6405		HN1K02FU
	Q6403,Q6404		RN1902
	D6404,D6408		1SS301
	D6403,D6407		UDZS6R8(B)
		COILS AND FILTERS	
	⚠F6401	EMI FILTER	CCG1162
		CAPACITORS	
	C6491 (10/6.3V)		ACG7046
	C6401,C6403,C6405,C6407,C6409		CCSSCH101J50
	C6411,C6419,C6426,C6428,C6430		CCSSCH101J50
	C6432,C6434,C6435,C6438,C6440		CCSSCH101J50
	C6442,C6444,C6446,C6448,C6449		CCSSCH101J50
	C6454,C6456,C6459,C6464,C6466		CCSSCH101J50
	C6468,C6470,C6472,C6474,C6476		CCSSCH101J50
	C6478,C6480,C6482		CCSSCH101J50
	C6462,C6463		CCSSCH120J50
	C6425,C6484		CEHVKW220M6R3
	C6402,C6404,C6406,C6408,C6410		CKSSYF104Z16
	C6412,C6414,C6416,C6418		CKSSYF104Z16
	C6420-C6424,C6427,C6429,C6431		CKSSYF104Z16
	C6433,C6436,C6437,C6439,C6441		CKSSYF104Z16
	C6443,C6445,C6447,C6450-C6453		CKSSYF104Z16
	C6455,C6457,C6458,C6460,C6461		CKSSYF104Z16
	C6465,C6467,C6469,C6471,C6473		CKSSYF104Z16
	C6475,C6477,C6479,C6481,C6483		CKSSYF104Z16
	C6490		CKSSYF104Z16
		RESISTORS	
	R6418,R6419,R6421		ACN1251
	R6414		RAB4CQ100J
	R6465		RAB4CQ103J
	R6438		RAB4CQ470J
	R6416		RAB4CQ680J
	Other Resistors		RS1/16S###J
		OTHERS	
	JA6401,JA6402	HDMI CONNECTOR	AKP1278
	X6401	CRYSTAL	ASS1192
		[DSEL BLOCK]	
		SEMICONDUCTORS	
	IC6601		PD6523A
	IC6602		TC74LCX125FT

Mark No.	Description	Part No.
	COILS AND FILTERS	
⚠	F6604 CHIP FERRITE BEAD	ATX1058
⚠	F6601-F6603 EMI FILTER	CCG1162
	CAPACITORS	
	C6632 (10/6.3V)	ACG7046
	C6604	CCSRCH221J50
	C6631	CKSSYB102K50
	C6601-C6603,C6607-C6610	CKSSYF104Z16
	C6613-C6617,C6619,C6621-C6623	CKSSYF104Z16
	C6625-C6627,C6629,C6630	CKSSYF104Z16
	RESISTORS	
	R6603-R6605	ACN1251
	R6611,R6614,R6618	BCN1071
	R6613,R6620	RAB4CQ101J
	Other Resistors	RS1/16S###J
	OTHERS	
	X6601 CRYSTAL	ASS1194
	[IP BLOCK]	
	SEMICONDUCTORS	
	IC6801,IC6802	K4S643232H-TC60
	IC6803	PE5504B
	COILS AND FILTERS	
⚠	L6801-L6804 CHIP FERRITE BEAD	BTX1042
	CAPACITORS	
	C6801 (10/6.3V)	ACG7046
	C6863	CKSSYB102K50
	C6802,C6804,C6807-C6809,C6813	CKSSYF104Z16
	C6815-C6817,C6821,C6824-C6828	CKSSYF104Z16
	C6830,C6831,C6834,C6835	CKSSYF104Z16
	C6839-C6862	CKSSYF104Z16
	RESISTORS	
	R6833,R6838	ACN1246
	R6841,R6844-R6847	ACN1251
	R6813,R6814,R6816,R6820,R6821	BCN1067
	R6823,R6825,R6827,R6828	BCN1067
	R6818	BCN1071
	R6832	RAB4CQ101J
	R6817	RAB4CQ470J
	Other Resistors	RS1/16S###J
	[MULTI BLOCK]	
	SEMICONDUCTORS	
	IC7001	PEG121B
	IC7002	S29JL032H70TFI21
	IC7004	TC74VHC08FTS1
	COILS AND FILTERS	
⚠	F7001-F7006 EMI FILTER	CCG1162
	CAPACITORS	
	C7052	CKSSYB102K50
	C7006,C7008,C7010-C7017,C7019	CKSSYF104Z16
	C7021,C7023,C7024,C7026-C7029	CKSSYF104Z16
	C7032-C7034,C7036,C7037	CKSSYF104Z16
	C7039-C7042,C7044,C7046-C7048	CKSSYF104Z16
	C7050	CKSSYF104Z16

Mark No.	Description	Part No.
	RESISTORS	
	R7011,R7013,R7024,R7032,R7036	ACN1246
	R7062-R7064	ACN1251
	R7015,R7023	RAB4CQ101J
	R7016,R7018,R7070	RAB4CQ103J
	R7060	RAB4CQ680J
	Other Resistors	RS1/16S###J
	[MR IF BLOCK]	
	SEMICONDUCTORS	
	IC7202	SII170BCLG64
	IC7201,IC7203	TC74VHC08FTS1
	Q7206	2SA1586
	Q7203,Q7207,Q7210	DTA124EUA
	Q7211	DTC124EUA
	Q7209	HN1C01FU
	Q7201	RN1902
	D7202-D7206	1SS355
	COILS AND FILTERS	
⚠	F7204-F7207 EMI FILTER	ATF1209
⚠	L7201 CHIP FERRITE BEAD	BTX1042
⚠	F7201-F7203,F7208 EMI FILTER	CCG1162
	CAPACITORS	
	C7203,C7207,C7208 (10/6.3V)	ACG7046
	C7226,C7227	CCSSCH100D50
	C7201,C7204,C7211,C7213,C7214	CCSSCH101J50
	C7216,C7217,C7219,C7221	CCSSCH101J50
	C7223	CKSSYB102K50
	C7209,C7215,C7220,C7225,C7228	CKSSYB471K50
	C7202,C7205,C7206,C7210,C7212	CKSSYF104Z16
	C7218,C7224	CKSSYF104Z16
	RESISTORS	
	R7215	RAB4CQ101J
	R7216	RS1/16S5100F
	Other Resistors	RS1/16S###J
	OTHERS	
	CN7201 20P SOCKET	AKP1226
	CN7202 24P DVI SOCKET	AKP1250

REAR IO ASSY

	COILS AND FILTERS	
	L7401,L7402	LCTAW560J2520
	CAPACITORS	
	C7404,C7405	CKSRYB102K50
	C7401-C7403	CKSRYB105K10
	RESISTORS	
	R7401-R7403	RS1/16S75R0F
	Other Resistors	RS1/16S###J
	OTHERS	
	JA7401 3P PIN JACK	AKB1321
	JA7402 3P PIN JACK	AKB1328
	CN7402 CONNECTOR	CKS3826

Mark	No.	Description	Part No.

SR ASSY

SEMICONDUCTORS

	IC7601	MAX3232CPW
	IC7603	TC74VHC00FTS1
	IC7602	TC74VHC125FTS1
	Q7601,Q7605	2SA1586
	Q7603	2SC4116
	Q7602,Q7604,Q7606	DTC124EUA
	D7609-D7612	1SS355

CAPACITORS

	C7608,C7611	CEHVKW100M16
	C7603-C7607,C7609,C7610	CKSSYF104Z16

RESISTORS

	All Resistors	RS1/16S###J

OTHERS

	JA7603 4P MINI JACK	AKN1073
	CN7602 9P D-SUB SOCKET	AKP1213
	CN7601 CONNECTOR	CKS3826
	JA7602 REMOTE CONTROL JACK	RKN1004

FRONT ASSY

SEMICONDUCTORS

	IC7801	BR24C21FJ
	IC7802	TC74VHC08FTS1
	Q7806-Q7808	2SC4116
	Q7804,Q7805	DTC124EUA
	D7813	1SS301
	D7816-D7818	1SS302
	D7801-D7803	UDZS5R1(B)
	D7809-D7812,D7814,D7815	UDZS5R6(B)
	D7804,D7808	UDZS9R1(B)

COILS AND FILTERS

	L7801,L7802	LCTAW1R0J2520
	L7803,L7804	LCTAW560J2520

CAPACITORS

	C7821,C7827,C7829,C7830 (10/6.3V)	ACG7046
	C7822,C7823	CCSRCH220J50
	C7817,C7818	CEHAT471M10
	C7803,C7804	CKSRYB103K50
	C7805,C7808,C7809,C7813	CKSRYB105K10
	C7831,C7832,C7834	CKSRYB105K10
	C7801	CKSRYB473K16
⚠	C7839,C7840	CKSSYB102K50
	C7802,C7820,C7824	CKSSYF104Z16
	C7819,C7835	DCH1165

RESISTORS

	R7801,R7803,R7809,R7857-R7859	RS1/16S75R0F
	Other Resistors	RS1/16S###J

OTHERS

	JA7803 PIN JACK 3P	AKB1303
	CN7803 12P FFC CONNECTOR	AKM1233
	CN7804 50P CONNECTOR	AKM1236
	CN7801 MINI JACK	AKN1028
	CN7806 15P D-SUB SOCKET	AKP1214
	JA7801 4P MINI DIN SOCKET	AKP1238

Mark	No.	Description	Part No.

LED ASSY

SEMICONDUCTORS

	Q8003	DTA124EUA
	Q8004	DTC124EUA
	Q8002	RN2902
	D8001	SML-311DT
	D8003	SML-311UT
	D8004	SML310BA1T

SWITCHES AND RELAYS

	S8001-S8006	ASG1088

CAPACITORS

	C8005,C8006	CCSRCH101J50
	C8001,C8002	CKSSYF104Z16

RESISTORS

	All Resistors	RS1/16S###J

OTHERS

	CN8001 CONNECTOR	CKS3826

POWER SUPPLY UNIT

POWER SUPPLY Unit has no service part.

■ FOR PDP-R06FE

Mark	No.	Description	Part No.

MR MAIN ASSY

OTHERS

	FRONT END	AXF1149
	DD CON UNIT	AXY1117

[BOARD IF BLOCK]

SEMICONDUCTORS

	Q4003,Q4004	2SA1586
	Q4001	DTA124EUA
	Q4002	TPC6104
	D4001-D4003,D4005	1SS355

CAPACITORS

	C4002	CKSRYB105K10
	C4003,C4004	CKSSYB104K10

RESISTORS

	R4021-R4023	RS1/10S0R0J
	R4007	RS2LMF8R2J
	Other Resistors	RS1/16S###J

OTHERS

	CN4008,CN4010 12P FFC CONNECTOR	AKM1233
	CN4001 50P CONNECTOR	AKM1236
	CN4009 PH CONNECTOR 3P	AKM1274

Mark No.	Description	Part No.
[RGB BLOCK]		
SEMICONDUCTORS		
	IC4212	BD6522F
	IC4211	MM1661JH
	IC4202	NCP1117ST15
	IC4209	NCP1117ST18
	IC4201	PQ025ENA1ZPH
	IC4204,IC4205	PQ033ENA1ZPH
	IC4206	PQ050DNA1ZPH
	IC4203	PQ090DNA1ZPH
	Q4201	DTC124EUA
	D4201-D4206,D4209,D4211	1SS355
COILS AND FILTERS		
	L4201 INDUCTOR	BTH1111
⚠	L4203-L4205 CHIP FERRITE BEAD	BTX1042
⚠	F4201-F4203,F4205,F4207 EMI FILTER	CCG1162
CAPACITORS		
	C4201,C4206,C4209,C4215 (10/6.3V)	ACG7046
	C4220,C4240,C4250,C4253 (10/6.3V)	ACG7046
	C4257,C4260,C4263 (10/6.3V)	ACG7046
	C4213 (100UF/16V)	ACH1394
	C4210,C4244,C4269	ACH1429
	C4273	CCSSCH101J50
	C4205,C4216,C4219,C4221,C4222	CEHVKW101M6R3
	C4224,C4228,C4238,C4264	CEHVKW101M6R3
	C4226	CEHVKW220M16
	C4214	CKSRYB104K16
	C4203,C4217,C4223	CKSRYB105K10
	C4229,C4252	CKSSYB104K10
	C4232	CKSSYB471K50
	C4204,C4212,C4227,C4251	CKSSYF104Z16
	C4261,C4262	CKSSYF104Z16
	C4211,C4225,C4256	DCH1165
RESISTORS		
	All Resistors	RS1/16S###J
[TUNER BLOCK]		
SEMICONDUCTORS		
	IC4401	MSP3417G
	Q4404	2SA1586
	Q4401,Q4402	2SC4116
	Q4414	DTA124EUA
	Q4410,Q4413,Q4415	DTC124EUA
	Q4407,Q4408	HN1A01FU
	Q4405	HN1B04FU
	Q4409	HN1C01FU
	D4401	UDZS33(B)
	D4403	UDZS8R2(B)
COILS AND FILTERS		
	L4401-L4403 CHIP COIL	BTH1119
	L4405,L4406	LCTAW150J2520
	L4407	LCTAW4R7J2520
	L4404	LCTAW8R2J2520
	F4401,F4402 FERRITE BEAD	VTF1080

Mark No.	Description	Part No.
CAPACITORS		
	C4404,C4407,C4415 (10/6.3V)	ACG7046
	C4416,C4429,C4459 (10/6.3V)	ACG7046
	C4424 (3.3UF/50V)	ACH1385
	C4449	CCSRCH680J50
	C4442	CCSRCJ3R0C50
	C4417,C4418	CCSSCH100D50
	C4431	CCSSCH101J50
	C4450	CCSSCH121J50
	C4456	CCSSCH181J50
	C4448	CCSSCH470J50
	C4428,C4443	CCSSCH560J50
	C4441	CCSSCH5R0D50
	C4409,C4423	CEHVKW100M16
	C4421	CEHVKW101M6R3
	C4422	CEHVKW470M16
	C4420	CKSRYB332K50
	C4401,C4411,C4413	CKSRYF104Z50
	C4403,C4406,C4410,C4430,C4440	CKSSYB102K50
	C4444,C4455,C4461	CKSSYB102K50
	C4408,C4439,C4446	CKSSYB103K16
	C4438,C4454	CKSSYB472K25
	C4402,C4405,C4425,C4426,C4432	CKSSYF104Z16
	C4434,C4435,C4447,C4451,C4460	CKSSYF104Z16
	C4465	CKSSYF104Z16
	C4414,C4437,C4445	DCH1165
RESISTORS		
	All Resistors	RS1/16S###J
OTHERS		
	X4401 CRYSTAL (18.432MHz)	ASS1196
[AV IO BLOCK]		
SEMICONDUCTORS		
	Q4614,Q4615,Q4626,Q4639	2SA1586
	Q4641,Q4642,Q4645,Q4646	2SA1586
	Q4602-Q4605,Q4607,Q4608	2SC4116
	Q4618-Q4620,Q4622-Q4624,Q4629	2SC4116
	Q4632-Q4636,Q4643	2SC4116
	Q4611,Q4612	2SD2114K
	Q4606,Q4616,Q4621,Q4631	DTA124EUA
	Q4610	DTA143EUA
	Q4613,Q4617	DTC124EUA
	Q4601,Q4609,Q4625,Q4630	HN1A01FU
	Q4644	HN1C01FU
	D4602,D4607,D4611,D4621	1SS301
	D4606,D4626	1SS355
COILS AND FILTERS		
	L4602,L4604,L4606,L4608	LCTAW1R0J2520
	L4611,L4612	LCTAW1R0J2520
	L4601,L4603,L4605,L4607	LCTAW560J2520
	L4609,L4610	LCTAW560J2520
SWITCHES AND RELAYS		
	S4601	ASH1029

Mark	No.	Description	Part No.
		CAPACITORS	
		C4601,C4605,C4620 (10/6.3V)	ACG7046
		C4621,C4634,C4636 (10/6.3V)	ACG7046
A		C4662 (100UF/16V)	ACH1394
		C4607,C4611,C4617,C4619,C4624	CCG1205
		C4628,C4643,C4649	CCG1205
		C4602,C4623,C4639	CEHAT471M10
		C4606,C4608,C4609,C4612	CKSRYB105K10
		C4615,C4616,C4626,C4629	CKSRYB105K10
		C4631-C4633,C4641,C4642	CKSRYB105K10
		C4645,C4646,C4650,C4652-C4654	CKSRYB105K10
		C4610,C4613,C4627,C4630	CKSSYB102K50
		C4647,C4648	CKSSYB102K50
	⚠	C4655-C4660	CKSSYB102K50
B		C4604,C4614,C4622,C4637,C4651	CKSSYF104Z16
		C4603,C4625,C4638	DCH1165
		RESISTORS	
		R4608,R4670,R4696	RS1/10S121J
		R4601,R4644,R4645,R4658,R4686	RS1/10S151J
		R4734,R4735	RS1/10S151J
		R4630-R4632,R4643,R4675,R4681	RS1/16S75R0F
		R4715-R4717,R4733	RS1/16S75R0F
		Other Resistors	RS1/16S###J
C		**OTHERS**	
		JA4601 RGB CONNECTOR (DUAL)	AKP1265
		JA4602 RGB CONNECTOR	AKP1266
		[AV SW BLOCK]	
		SEMICONDUCTORS	
		IC4805	NJM12904V
		IC4806	R2S11001FT
		IC4804	R2S11002FT
		Q4801,Q4802,Q4804-Q4806,Q4809	2SA1586
		Q4818,Q4820	2SA1586
D		Q4812,Q4813	2SC4116
		Q4814	DTA124EUA
		Q4815	DTC124EUA
		Q4807	HN1B04FU
		D4802	1SS301
		D4801	1SS355
		CAPACITORS	
		C4916 (4.7U/10V)	ACG1122
		C4821,C4835,C4871,C4875 (10/6.3V)	ACG7046
		C4877,C4880	CCSRCH181J50
E		C4859	CCSRCH331J50
		C4861	CCSRCH680J50
		C4885,C4888	CCSRCH681J50
		C4822,C4862	CEHVKW101M6R3
		C4802,C4805,C4806,C4808	CKSRYB105K10
		C4813,C4814,C4820,C4833,C4834	CKSRYB105K10
		C4836,C4838-C4841,C4847,C4848	CKSRYB105K10
		C4850,C4851,C4878,C4879	CKSRYB105K10
		C4899-C4905	CKSRYB105K10
		C4837	CKSRYB474K10
		C4853-C4858,C4860,C4865	CKSSYB103K16
F		C4869,C4870,C4890-C4893	CKSSYB103K16

Mark	No.	Description	Part No.
		C4807,C4809	CKSSYB104K10
		C4801,C4819,C4845,C4846,C4864	CKSSYF104Z16
		C4873,C4884,C4886,C4887	CKSSYF104Z16
		C4917-C4920,C4924,C4925	CKSSYF104Z16
		C4844,C4863,C4866,C4872,C4876	DCH1165
		RESISTORS	
		R4784,R4786	RS1/16S1800F
		R4785,R4787,R4792,R4794,R4796	RS1/16S5600F
		R4791,R4793,R4795	RS1/16S75R0F
		R4857-R4860,R4944,R4985	RS1/16SS3301F
		Other Resistors	RS1/16S###J
		[IF UCOM BLOCK]	
		SEMICONDUCTORS	
		IC5002	HD64F3684FP
		IC5003	PST9230N
		IC5001	TC74VHC08FTS1
		IC5004	TC7W126FU
		Q5005	DTA124EUA
		Q5001	DTC124EUA
		CAPACITORS	
		C5007,C5008	CCSSCH180J50
		C5001	CEHVKW101M6R3
		C5010	CKSSYB472K25
		C5002-C5005,C5009,C5012	CKSSYF104Z16
		RESISTORS	
		R5002,R5004,R5007,R5025,R5026	RAB4CQ103J
		Other Resistors	RS1/16S###J
		OTHERS	
		X5002 CERAMIC RESONATOR	ASS1168
		X5001 CRYSTAL	ASS1172
		[MAIN UCOM BLOCK]	
		SEMICONDUCTORS	
		IC5202	BR24L64F-W
		IC5206	MB91305PMC-G-BND
		IC5207	MBM29DL162TE70TN
		IC5210	MM1522XU
		IC5209	PQ200WNA1ZPH
		IC5203	PST3628UR
		IC5201	TC74VHC125FTS1
		Q5202	2SJ461A
		Q5204	DTC124EUA
		Q5201	SM6K2
		D5203	1SS355
		D5201	SML-311UT
		CAPACITORS	
		C5235	CCSRCH221J50
		C5244,C5245	CCSSCH120J50
		C5217,C5218,C5237,C5239-C5243	CCSSCH470J50
		C5246-C5249	CCSSCH470J50
		C5238	CEHVKW100M35
		C5201	CEHVKW101M6R3
		C5261-C5263	CKSSYB102K50
		C5216,C5233	CKSSYB103K16
		C5215	CKSSYB472K25
		C5253	CKSSYF103Z50

Mark No.	Description	Part No.
	C5202-C5209,C5211-C5214,C5219	CKSSYF104Z16
	C5222-C5232,C5234,C5252	CKSSYF104Z16
	C5236	DCH1165
	RESISTORS	
	R5262,R5268	ACN1248
	R5205,R5213	RAB4CQ101J
	R5283	RS1/16S1001F
	R5282	RS1/16S4701F
	R5273	RS1/16S8201F
	Other Resistors	RS1/16S###J
	OTHERS	
	CN5202 50P CONNECTOR	AKM1201
	K5201,K5202 TEST PIN	AKX9002
	X5201 CERAMIC RESONATOR	ASS1178
	[TEXT UCOM BLOCK]	
	SEMICONDUCTORS	
	IC5403	K4S641632H-TC75
	IC5404	S29AL016D70TFI010
	IC5405	SDA6000
	IC5407	TC74LCX125FT
	IC5402	TC7SH04FUS1
	IC5406	TC7W126FU
	Q5401,Q5406	DTA124EUA
	Q5403,Q5407	DTC124EUA
	D5404	1SS355
	D5401	UDZS12(B)
	D5402	UDZS3R0(B)
	D5403	UDZS3R9(B)
	COILS AND FILTERS	
⚠	F5402,F5403 EMI FILTER	CCG1162
	CAPACITORS	
	C5412,C5438,C5453 (10/6.3V)	ACG7046
	C5422,C5423	CCSSCH200J50
	C5404	CKSSYB102K50
	C5403	CKSSYB103K16
	C5445	CKSSYB104K10
	C5405,C5406,C5408,C5410,C5413	CKSSYF104Z16
	C5416,C5418,C5420,C5425,C5427	CKSSYF104Z16
	C5429-C5431,C5434,C5435,C5440	CKSSYF104Z16
	C5442,C5446,C5449,C5451,C5454	CKSSYF104Z16
	C5456,C5458,C5460,C5476	CKSSYF104Z16
	RESISTORS	
	R5409	ACN1251
	R5404,R5428,R5429,R5434,R5435	BCN1067
	R5439,R5457,R5476	RAB4CQ103J
	R5432,R5460	RAB4CQ680J
	Other Resistors	RS1/16S###J
	OTHERS	
	X5401 CRYSTAL	ASS1193
	[VDEC BLOCK]	
	SEMICONDUCTORS	
	IC6002	K4S161622H-TC60
	IC6003	UPD64015AGM-UEU

Mark No.	Description	Part No.
	COILS AND FILTERS	
⚠	F6001,F6002,F6010,F6011 EMI FILTER	CCG1162
	CAPACITORS	
	C6056,C6088 (10/6.3V)	ACG7046
	C6078,C6083	CCSSCH8R0D50
	C6062,C6069,C6070,C6074,C6080	CKSSYB103K16
	C6046,C6058,C6063,C6064	CKSSYB104K10
	C6066,C6067,C6072,C6073	CKSSYB104K10
	C6075-C6077,C6081,C6082	CKSSYB104K10
	C6084,C6085	CKSSYB104K10
	C6001-C6008,C6012-C6028	CKSSYF104Z16
	C6031-C6045,C6065,C6068,C6071	CKSSYF104Z16
	C6079,C6090,C6091	CKSSYF104Z16
	RESISTORS	
	R6010,R6068,R6072	ACN1246
	R6065,R6073	BCN1067
	R6007,R6030,R6071	RAB4CQ220J
	R6063	RS1/16SS1001D
	R6038,R6039,R6049	RS1/16SS2000F
	R6054	RS1/16SS2201D
	R6052	RS1/16SS6200D
	Other Resistors	RS1/16S###J
	OTHERS	
	X6002 CRYSTAL	ASS1191
	[ADC BLOCK]	
	SEMICONDUCTORS	
	IC6201	AD9985KSTZ-110
	COILS AND FILTERS	
⚠	F6201,F6204 EMI FILTER	CCG1162
	CAPACITORS	
	C6205,C6209	CKSSYB104K10
	C6207,C6210,C6218	CKSSYB473K16
	C6202	CKSSYB822K16
	C6201	CKSSYB823K10
	C6203,C6204,C6206,C6208	CKSSYF104Z16
	C6211,C6212,C6215-C6217	CKSSYF104Z16
	C6222-C6224	CKSSYF104Z16
	RESISTORS	
	R6213,R6218,R6223	BCN1067
	R6202	RS1/16SS2701F
	Other Resistors	RS1/16S###J
	[HDMI BLOCK]	
	SEMICONDUCTORS	
	IC6403	BR24L02FJ-W
	IC6405	PCM1754DBQ
	IC6404	SII9021CTU
	Q6416	2SA1586
	Q6414	DTA124EUA
	Q6415	DTC124EUA
	Q6405	HN1K02FU
	Q6404	RN1902
	D6408	1SS301
	D6407	UDZS6R8(B)

Mark	No.	Description	Part No.
		COILS AND FILTERS	
	⚠F6401	EMI FILTER	CCG1162
		CAPACITORS	
	C6491	(10/6.3V)	ACG7046
	C6401,C6403,C6405,C6407,C6411		CCSSCH101J50
	C6419,C6426,C6428,C6430,C6432		CCSSCH101J50
	C6434,C6435,C6438,C6440,C6442		CCSSCH101J50
	C6444,C6446,C6448,C6449,C6454		CCSSCH101J50
	C6456,C6459,C6464,C6466,C6468		CCSSCH101J50
	C6470,C6472,C6474,C6476,C6478		CCSSCH101J50
	C6480,C6482		CCSSCH101J50
	C6462,C6463		CCSSCH120J50
	C6484		CEHVKW220M6R3
	C6402,C6404,C6406,C6408,C6410		CKSSYF104Z16
	C6412,C6414,C6416,C6418,C6420		CKSSYF104Z16
	C6422,C6423,C6427,C6429,C6431		CKSSYF104Z16
	C6433,C6436,C6437,C6439,C6441		CKSSYF104Z16
	C6443,C6445,C6447,C6450,C6451		CKSSYF104Z16
	C6455,C6457,C6458,C6460,C6461		CKSSYF104Z16
	C6465,C6467,C6469,C6471,C6473		CKSSYF104Z16
	C6475,C6477,C6479,C6481,C6483		CKSSYF104Z16
	C6490		CKSSYF104Z16
		RESISTORS	
	R6418,R6419,R6421		ACN1251
	R6414		RAB4CQ100J
	R6465		RAB4CQ103J
	R6438		RAB4CQ470J
	R6416		RAB4CQ680J
	Other Resistors		RS1/16S###J
		OTHERS	
	JA6402	HDMI CONNECTOR	AKP1278
	X6401	CRYSTAL	ASS1192
		[DSEL BLOCK]	
		SEMICONDUCTORS	
	IC6601		PD6523A
	IC6602		TC74LCX125FT
		COILS AND FILTERS	
	⚠F6604	CHIP FERRITE BEAD	ATX1058
	⚠F6601-F6603	EMI FILTER	CCG1162
		CAPACITORS	
	C6632	(10/6.3V)	ACG7046
	C6604		CCSRCH221J50
	C6631		CKSSYB102K50
	C6601-C6603,C6607-C6610		CKSSYF104Z16
	C6613-C6617,C6619,C6621-C6623		CKSSYF104Z16
	C6625-C6627,C6629,C6630		CKSSYF104Z16
		RESISTORS	
	R6603-R6605		ACN1251
	R6611,R6614,R6618		BCN1071
	R6613,R6620		RAB4CQ101J
	Other Resistors		RS1/16S###J
		OTHERS	
	X6601	CRYSTAL	ASS1194

Mark	No.	Description	Part No.
		[IP BLOCK]	
		SEMICONDUCTORS	
	IC6801,IC6802		K4S643232H-TC60
	IC6803		PE5504B
		COILS AND FILTERS	
	⚠L6801-L6804	CHIP FERRITE BEAD	BTX1042
		CAPACITORS	
	C6801	(10/6.3V)	ACG7046
	C6863		CKSSYB102K50
	C6802,C6804,C6807-C6809,C6813		CKSSYF104Z16
	C6815-C6817,C6821,C6824-C6828		CKSSYF104Z16
	C6830,C6831,C6834,C6835		CKSSYF104Z16
	C6839-C6862		CKSSYF104Z16
		RESISTORS	
	R6833,R6838		ACN1246
	R6841,R6844-R6847		ACN1251
	R6813,R6814,R6816,R6820,R6821		BCN1067
	R6823,R6825,R6827,R6828		BCN1067
	R6818		BCN1071
	R6832		RAB4CQ101J
	R6817		RAB4CQ470J
	Other Resistors		RS1/16S###J
		[MULTI BLOCK]	
		SEMICONDUCTORS	
	IC7001		PEG121B
	IC7002		S29JL032H70TFI21
	IC7004		TC74VHC08FTS1
		COILS AND FILTERS	
	⚠F7001-F7006	EMI FILTER	CCG1162
		CAPACITORS	
	C7052		CKSSYB102K50
	C7006,C7008,C7010-C7017,C7019		CKSSYF104Z16
	C7021,C7023,C7024,C7026-C7029		CKSSYF104Z16
	C7032-C7034,C7036,C7037		CKSSYF104Z16
	C7039-C7042,C7044,C7046-C7048		CKSSYF104Z16
	C7050		CKSSYF104Z16
		RESISTORS	
	R7011,R7013,R7024,R7032,R7036		ACN1246
	R7062-R7064		ACN1251
	R7015,R7023		RAB4CQ101J
	R7016,R7018,R7070		RAB4CQ103J
	R7060		RAB4CQ680J
	Other Resistors		RS1/16S###J
		[MR IF BLOCK]	
		SEMICONDUCTORS	
	IC7202		SII170BCLG64
	IC7201,IC7203		TC74VHC08FTS1
	Q7206		2SA1586
	Q7203,Q7207,Q7210		DTA124EUA
	Q7211		DTC124EUA
	Q7209		HN1C01FU
	Q7201		RN1902
	D7202-D7206		1SS355

Mark	No.	Description	Part No.
COILS AND FILTERS			
⚠	F7204-F7207	EMI FILTER	ATF1209
⚠	L7201	CHIP FERRITE BEAD	BTX1042
⚠	F7201-F7203,F7208	EMI FILTER	CCG1162
CAPACITORS			
	C7203,C7207,C7208 (10/6.3V)		ACG7046
	C7226,C7227		CCSSCH100D50
	C7201,C7204,C7211,C7213,C7214		CCSSCH101J50
	C7216,C7217,C7219,C7221		CCSSCH101J50
	C7223		CKSSYB102K50
	C7209,C7215,C7220,C7225,C7228		CKSSYB471K50
	C7202,C7205,C7206,C7210,C7212		CKSSYF104Z16
	C7218,C7224		CKSSYF104Z16
RESISTORS			
	R7215		RAB4CQ101J
	R7216		RS1/16S5100F
	Other Resistors		RS1/16S###J
OTHERS			
	CN7201	20P SOCKET	AKP1226
	CN7202	24P DVI SOCKET	AKP1250

REAR IO ASSY

Mark	No.	Description	Part No.
COILS AND FILTERS			
	L7401,L7402		LCTAW560J2520
CAPACITORS			
	C7404,C7405		CKSRYB102K50
	C7401-C7403		CKSRYB105K10
RESISTORS			
	R7401-R7403		RS1/16S75R0F
	Other Resistors		RS1/16S###J
OTHERS			
	JA7402	3P PIN JACK	AKB1328
	CN7402	CONNECTOR	CKS3826
	JA7401	3P PIN JACK	PKB1034

SR ASSY

Mark	No.	Description	Part No.
SEMICONDUCTORS			
	IC7601		MAX3232CPW
	IC7602		TC74VHC125FTS1
CAPACITORS			
	C7608		CEHVKW100M16
	C7603-C7607,C7610		CKSSYF104Z16
RESISTORS			
	All Resistors		RS1/16S###J
OTHERS			
	CN7602	9P D-SUB SOCKET	AKP1213
	CN7601	CONNECTOR	CKS3826

FRONT ASSY

Mark	No.	Description	Part No.
SEMICONDUCTORS			
	D7801-D7803		UDZS5R1(B)
	D7804,D7808		UDZS9R1(B)
COILS AND FILTERS			
	L7801,L7802		LCTAW1R0J2520
CAPACITORS			
	C7803,C7804		CKSRYB103K50
	C7805,C7808,C7809,C7813		CKSRYB105K10
	C7801		CKSRYB473K16
⚠	C7839,C7840		CKSSYB102K50
	C7802,C7836-C7838		CKSSYF104Z16
	C7835		DCH1165
RESISTORS			
	R7801,R7803,R7809		RS1/16S75R0F
	Other Resistors		RS1/16S###J
OTHERS			
	JA7803	3P PIN JACK	AKB1303
	CN7803	12P FFC CONNECTOR	AKM1233
	CN7804	50P CONNECTOR	AKM1236
	JA7801	4P MINI DIN SOCKET	AKP1238

LED ASSY

Mark	No.	Description	Part No.
SEMICONDUCTORS			
	Q8004		DTC124EUA
	Q8002		RN2902
	D8003		SML-311UT
	D8004		SML310BA1T
SWITCHES AND RELAYS			
	S8001-S8006		ASG1088
CAPACITORS			
	C8005,C8006		CCSRCH101J50
	C8001,C8002		CKSSYF104Z16
RESISTORS			
	All Resistors		RS1/16S###J
OTHERS			
	CN8001	CONNECTOR	CKS3826

POWER SUPPLY UNIT

POWER SUPPLY Unit has no service part.

6. ADJUSTMENT

1. At shipment, the unit is adjusted to its best conditions. Normally, it is not necessary to readjust even if an assembly is replaced. Replacement of individual components on the circuitboard can cause malfunction and/or failure. If replacement is necessary, the assembly must be replaced.
2. Use a stable AC power supply.

6.1 POSSIBLE CASES WHERE READJUSTMENT IS REQUIRED

■ When any of the following assemblies is replaced

POWER SUPPLY Unit	➡	No adjustment required
MR MAIN Assy	➡	No adjustment required
PC Card Module	➡	No adjustment required
R06 D-TUNER Assy	➡	No adjustment required
Other assemblies	➡	No adjustment required

■ When any part in the following assemblies is replaced

POWER SUPPLY Unit	➡	The assembly must be replaced as a unit, and no part replacement is allowed.
MR MAIN Assy	➡	Replacement of components IC4804, IC4806, IC5207, IC6001, IC6003 and IC6201 on the circuitboard can cause malfunction and/or failure. If replacement is necessary, the assembly must be replaced.
PC Card Module	➡	The assembly must be replaced as a unit, and no part replacement is allowed.
R06 D-TUNER Assy	➡	The assembly must be replaced as a unit, and no part replacement is allowed.
Other assemblies	➡	No adjustment required

6.2 USING RS-232C COMMANDS

For the PDP-436HD and PDP-506HD series Plasma Displays, the circuitry is structured as shown in the diagram below to support the SR+ system. Controlling with either the SR+ system or RS-232C commands can be selected. As the SR+ system is selected at shipment, to control with RS-232C commands in servicing it is necessary to switch the paths. After servicing, be sure to return the setting to the SR+ system.

● Rough diagram of switching between SR+ and RS-232C

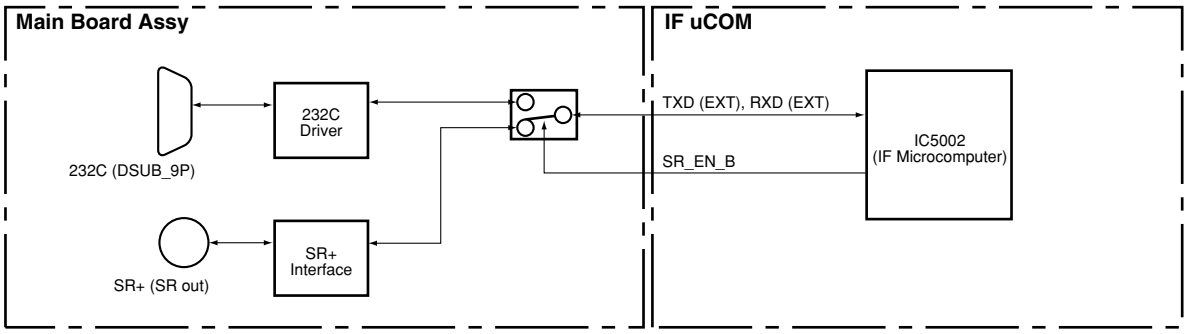

● How to switch from SR+ to RS-232C

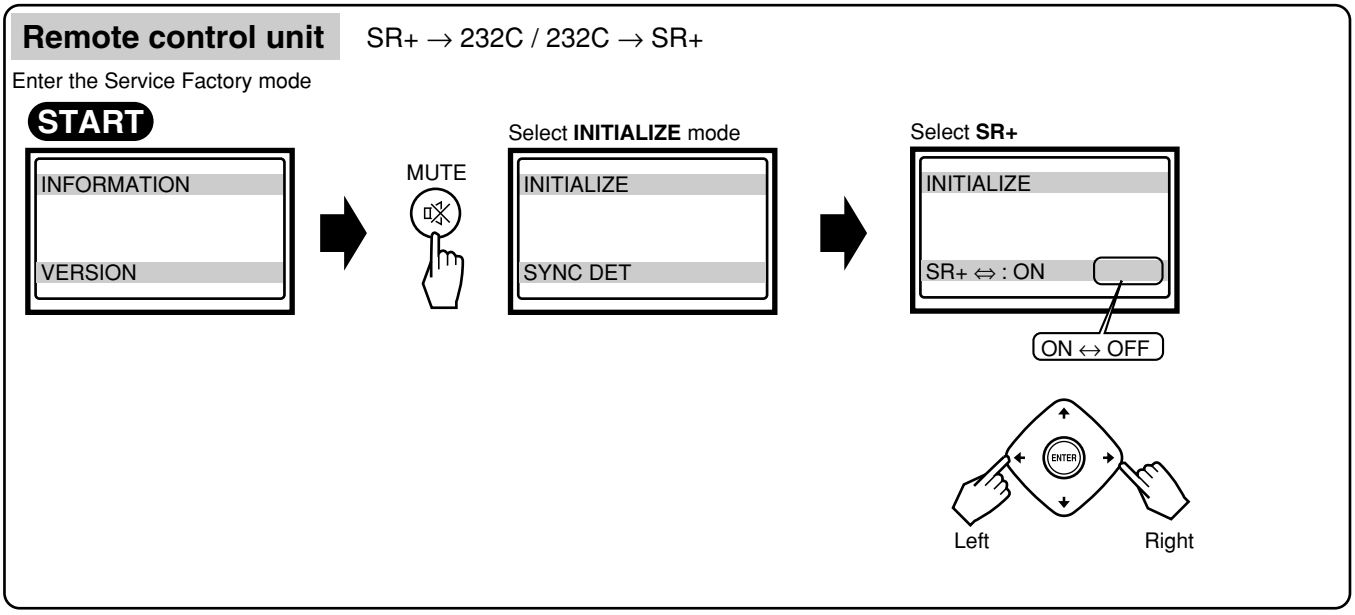

Tips: How to change the SR+/RS-232C setting without entering Service Factory mode
Hold the **VOLUME** ◿+ or ◿– key on the remote control unit pressed for 3-10 seconds during Standby mode.
Then within 3 seconds after the key is released, hold the **2-screen** ◑ key on the remote control unit pressed for 3-10 seconds.
Then within 3 seconds after the key is released, use the **SET** key on the remote control unit to set to RS-232C (the baud rate last selected is chosen) or the **HOME MENU** key to set to SR+.

6.3 SERVICING USING ONLY THE MEDIA RECEIVER

For servicing of the PDP-436HD and PDP-506HD-series Plasma Display using only the Media Receiver, the following two methods can be used :

Operations using a Media Receiver alone are provided for rewriting software and essentially are not guaranteed as proper operations. As video signals are output during those operations, when the plasma display is connected to the Media Receiver, as shown in the connection examples below, you can check the signals on the screen. However, when a plasma display model prior to the PDP-433P(or PDP-503P) is connected, noise may appear in the signals.

To check functions or operations, be sure to use a PDP-436P(or PDP-506P).

● Remote controlling using SR connections (Except PDP-R06FE)

About connections

- Connect the SR OUT connector of a Pioneer product having that connector (a DVD in the following example) and the SR IN connector of the Media Receiver, using the SR cable. As the remote control sensor is not provided with the Media Receiver, this connection is required for using the remote control unit if the panel is not available. In this case, aim the remote control unit at the remote control sensor of the device (DVD in this case).
- Connect either the audio or the video output of the device (DVD in the example) and the corresponding audio or video input of the Media Receiver, using a cable with phono plugs. This connection is required in order to use ground in common with the SR cable, because with the SR cable connection the ground connection for signal reference is not available. In the example, the audio L channel is used, but the audio R channel or video can be used instead.
- If the plasma display for a previous model, such as the PDP-433P or PDP-503P, is available, servicing while checking displays or using the menus is possible. For this, connect only the DVI connectors (white) of the Media Receiver and the plasma display. The MDR connector of the Media Receiver must not be used, even though it has the same shape and number of pins, because signals assigned to the connectors differ. Using the MDR connector may damage the unit.

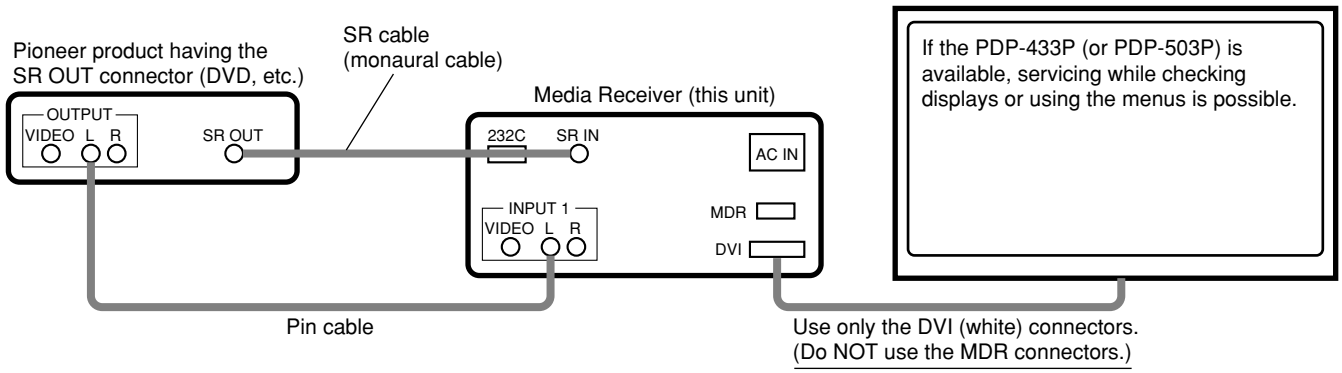

● RS-232C control using a PC

RS-232C control is not available in shipment.

Please set baud rate of PC in 38400bps.

For connection with the PC, use a straight cable.

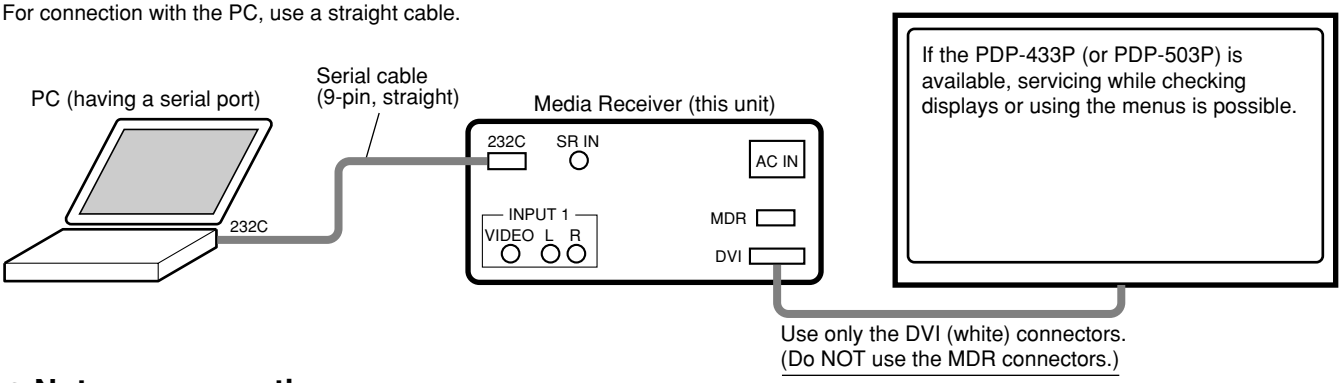

● Note on connection

If the MDR connector of the PDP-436HD or PDP-506HD-series is used, it is considered that the PDP-436P (or PDP-506P) is connected, and the Media Receiver operates on such precondition, **which may result in a failure of the Media Receiver. Be sure not to connect to the MDR connector.** (Do NOT use the MDR connector when servicing the Media Receiver alone.)

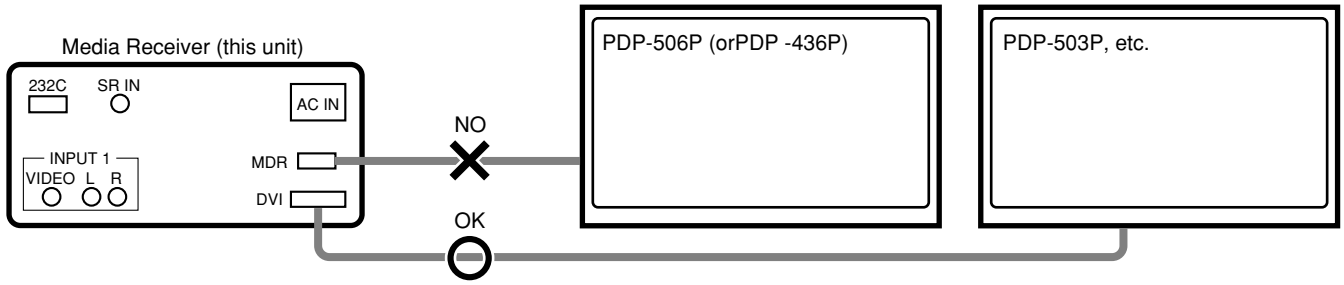

6.4 SERVICE FACTORY MODE

To operate in Service Factory mode, use the supplied remote control unit.

How to enter Service Factory Mode

While in Standby mode, follow the below procedures with the remote control to enter Service Factoy mode.

1. Press the [DISPLAY] key.
2. 3 second counter will start.
3. After 3 seconds, press [LEFT] key.
   (If no operation is done within 10 seconds, the Service Factory routine is cleared, and the standby mode is returned)
4. 5 Second counter will start.
5. Before 5 second counter ends, press [UP] key.
6. Before 5 second counter ends, press [LEFT] key.
7. Before 5 second counter ends, press [RIGHT] key.
8. Before 5 second counter ends, press [POWER] key.
9. If the prodcedure is correct with the given time, the Service Factory mode is up and ready.

* During step 3 to 8, if other operations took place, the Service Factory routine is cleared.
* If the counter's time is up, normal standby mode is returned.

Operation in Service Factory mode

● Functions whose settings are set to OFF

The settings for the following functions are set to OFF when Service Factory mode is entered (including when the "FAY" command is received):

- Two-screen operations (input function set on the main side is selected)
- P ZOOM
- FREEZE
- Detection of the TRAP switch (The log in the EEPROM is retained.) (KUC type only)

● User data

User data will be treated as follows:

- User data on picture- and audio-quality adjustments are not reflected, and factory-preset data are output (user data will be retained in memory). When the unit enters Factory mode, the current audio-quality adjustment data will still be retained in memory.
- As to data on various settings, user data will be applied to the items that are associated with signal format change (screen size switching, etc.).
- Data on screen (i.e., screen position; meaning clock dividers, and not including data on screen size) are reset to the default values (data stored in memory will be retained). Screen size will be retained.

Remote control codes in Service Factory mode

SR Function	Main Function	Remarks
Muting	Switching the main items	Shifting to the next main item (top)
DOWN	Switching the subtitled items	Shifting downward to the next subtitled item
UP	Switching the subtitled items	Shifting upward to the next upper layer
LEFT	Increasing the adjustment value	Increasing the adjustment value
RIGHT	Decreasing the adjustment value	Decreasing the adjustment value
SET	Switching layers	Shifting downward or upward to the next lower or upper layer
INPUT	Selecting input	Shifting the input to the next function
INPUTxx	Selecting input	Switching the input to xx
CH+	Increasing the channel number	Advancing a preset channel (effective when Function is set to TV)
CH-	Decreasing the channel number	Turning a preset channel backward (effective when Function is set to TV)
Numeric keys	Function: TV	Function: TV (previously selected channel number is selected)
POWER	Power OFF	Turning the power off
FACTORY	Factory OFF	Turning Service Factory mode off
MENU	Menu ON	Turning Service Factory mode off and Menu mode on

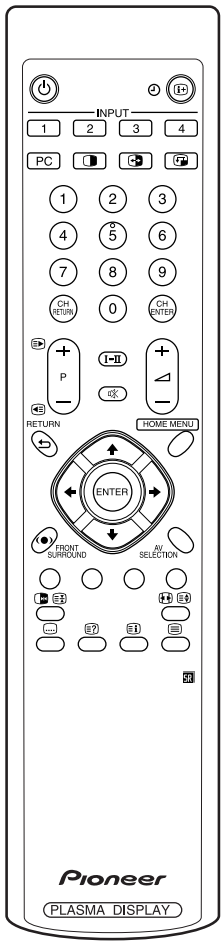

Changes of the Service Factory menus

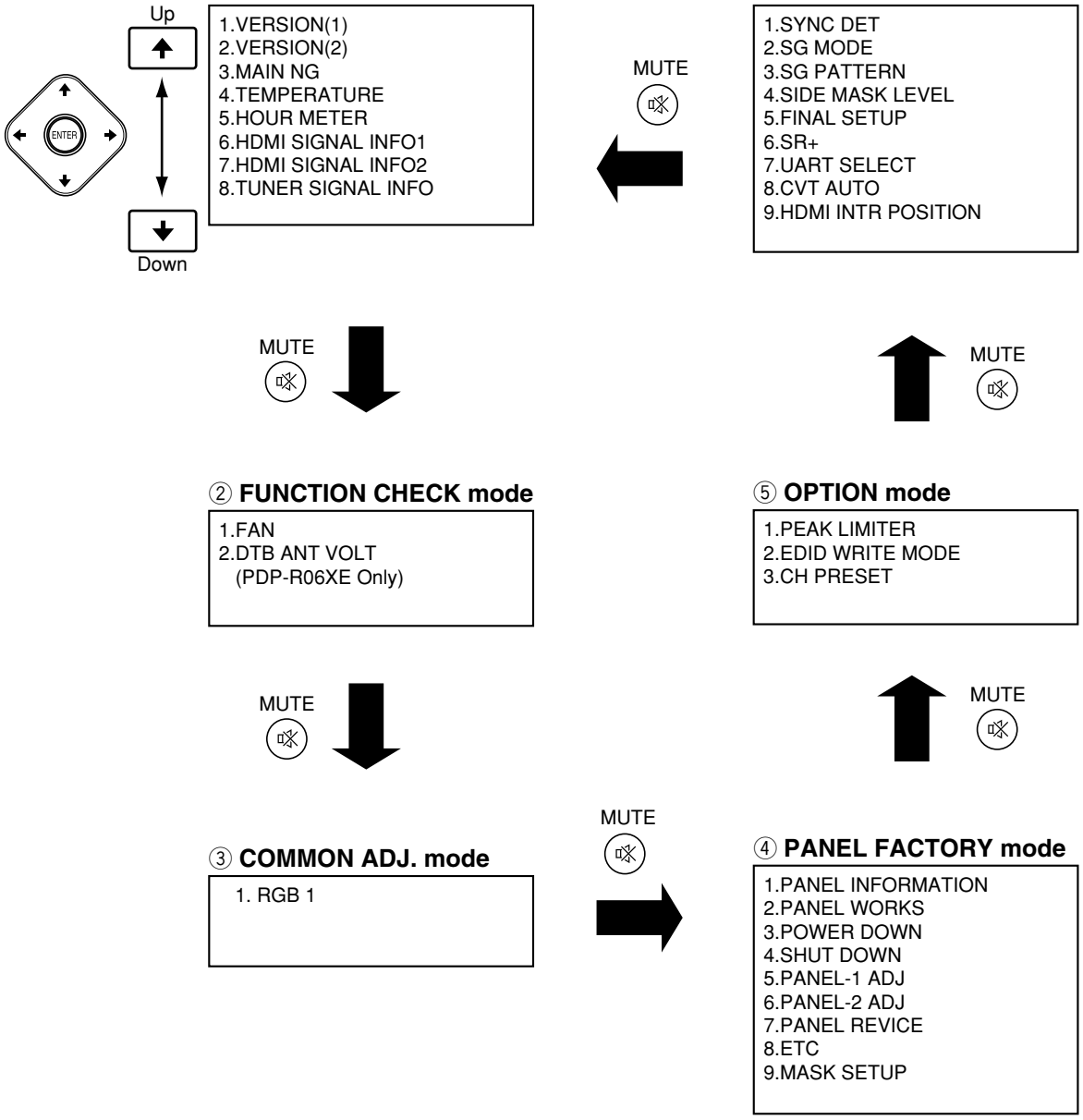

Indications in Service Factory mode

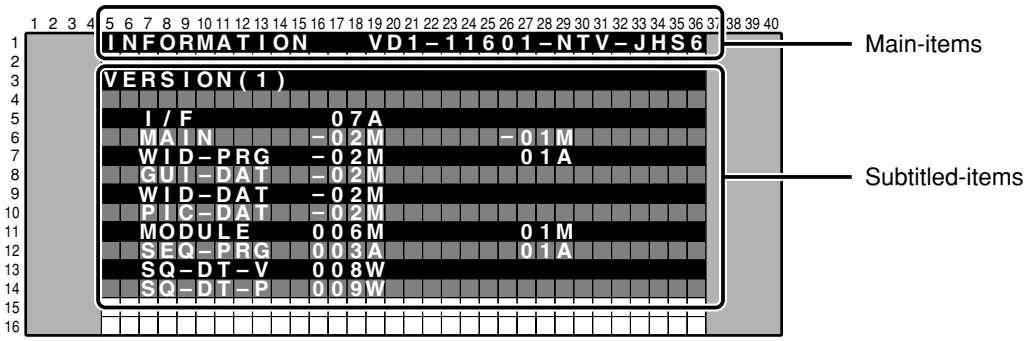

Main-item indications

Four parameters are displayed:

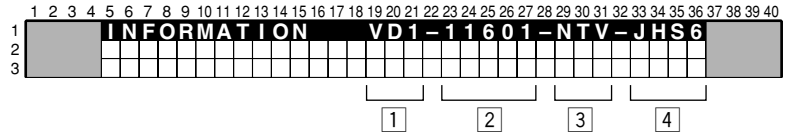

1 Input function

Input Functions	On-Screen Display
INPUT 1- 5	AV 1 - 5
Analog Tuner	AIR
Digital Tuner	ARD
PC Card	PCC
PC	PC

Note : AV5/ARD/PCC/ PC is PDP-R06XE only.

2 SIG mode and screen size

Note: See SIG-Mode Tables. (See next page.)

3 Color system and signal type

Color System and Signal Type		On-Screen Display	Color System and Signal Type		On-Screen Display
NTSC	Composite input	NTV	NTSC	S-connector input	NTS
PAL		PLV	PAL		PLS
PAL N		PNV	PAL N		PNS
PAL M		PMV	PAL M		PMS
SECAM		SCV	SECAM		SCS
4.43NTSC		4NV	4.43NTSC		4NS
BLACK/WHITE		BWV	BLACK/WHITE		BWS
Y / CB / CR		CBR	RGB		RGB
Y / PB / PR		PBR	Digital video signal		DIG

4 Option (Destination, etc.)

Options	On-Screen Display
Advanced : PDP-R06XE	EHS6
Basic : PDP-R06FE	EBS6

● SIG-Mode Table

The signal mode is displayed in four charecters:

1st and 2nd charecters : Resolutin of the input signal (numerics for the video signals, and alphabetics for the PC signals)
3rd and 4th charecters : Grouping of the V frequencies (refresh rate)
5th charecter : Selection of the screen size by the user is displayed.

SIG-Mode table for video signals (resolutions and V frequencies)

1st and 2nd	3rd and 4th	Signal Type	Fv (Hz)	Fh (kHz)
10	50	SDTV*625i	50.000	15.625
	60	SDTV*525i	60.000	15.750
12	60	SDTV*525i (PAL60)	60.000	15.750
20	50	SDTV*625p	50.000	31.250
	60	SDTV*525p	60.000	31.500
30	50	HDTV*1125i	50.000	28.125
	60	HDTV*1125i	60.000	33.750
40	50	HDTV*750p	50.000	37.500
	60	HDTV*750p	60.000	45.000
50	24	HDTV*1125p	24.000	27.000

Fv: Vertical Frequency, Fh: Horizontal Frequency

SIG-Mode table for PC signals(resolutions and V frequencies)

1st and 2nd	3rd and 4th	Signal Type	Fv (Hz)	Fh (kHz)
C1	70	720x400	70.087	31.469
C2	60	640x480	59.940	31.469
	72		72.809	37.861
	75		75.000	37.500
C4	56	800x600	56.250	35.1556
	60		60.317	37.879
	72		72.188	48.077
	75		75.000	46.875
C7	60	1024x768	60.004	48.363
	70		70.069	56.476
	75		75.029	60.023
C8	56	1280x768	56.250	45.113
	60		59.833	47.986
	70		70.000	56.137

Fv: Vertical Frequency, Fh: Horizontal Frequency

Selection of the screen size by the user is displayed.

5th	Description on GUI	VIDEO	PC	Remarks
0	DOT BY DOT	–	●	
1	4:3	●	●	
2	FULL(FULL1)	●	●	
3	ZOOM	●	–	
4	CINEMA	●	–	
5	WIDE	●	–	
6	FULL 14:9	●	–	
7	CINEMA 14:9	●	–	
8	FULL2	●	●	

●: available, –: not available

■ Factory Menus

① INFORMATION mode

● Operation items

No.	Function / Display	Content	RS-232C
1	VERSION (1)	The flash memory versions for each device are displayed. (common part)	QS1
2	VERSION (2)	The flash memory versions for each device are displayed. (individual part)	QS6
3	MAIN NG	The shutdown generated on Media Receiver side and its time of occurrence are displayed.	QNG
4	TEMPERATURE	Information of temperature and fan status on Media Receiver side are displayed.	QMT
5	HOUR METER	Cumulative power-on time to the Media Receiver is displayed.	–
6	HDMI SIGNAL INFO 1	The file information of HDMI series are displayed.	–
7	HDMI SIGNAL INFO 2		–
8	TUNER SIGNAL INFO	The signal information on TUNER is displayed.	–

1. VERSION (1)

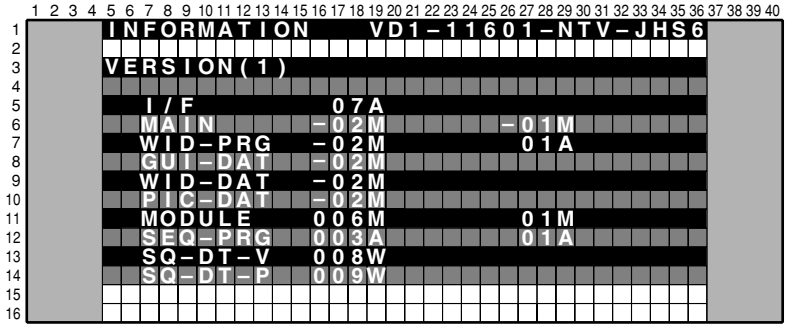

Flash memory on Device	On-Screen Display
IF microcomputer	I/F
Main microcomputer	MAIN
Program for CARRERA-MANTA	WID-PRG
GUI data for CARRERA-MANTA	GUI-DAT
Enhanced data for CARRERA-MANTA.	WID-DAT
Picture Quality data for CARRERA-MANTA	PIC-DAT
Module microcomputer(for the PDP)	MODULE
Program for ASTRA-MANTA(for the PDP)	SEQ-PRG
Sequence data for ASTRA-MANTA Video	SQ-DT-V
Sequence data for ASTRA-MANTA PC	SQ-DT-P

2. VERSION (2)

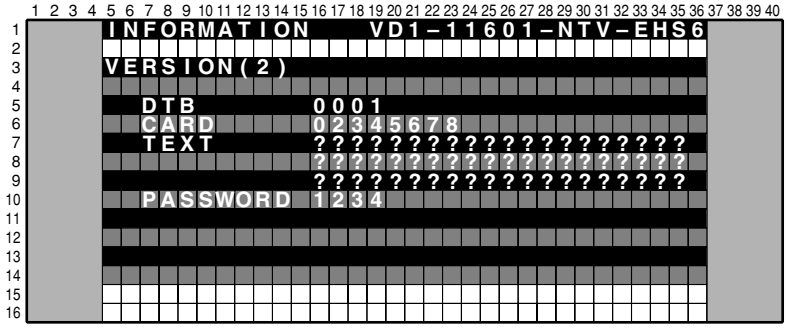

Device	On - Screen Display	Version Display	Remarks
DTB Software Version	DTB	4 character	PDP-R06XE only
PC Card Software Version	CARD	8 character	PDP-R06XE only
Teletext ucom Software Version	TEXT	60 character	20 character x 3
User Password	PASSWORD	4 character	

3. MAIN NG

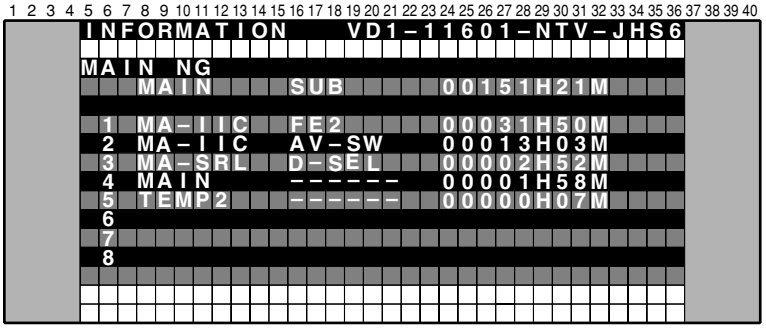

● **Media Receiver NG information**

OSD: MAIN	OSD: SUB	Cause of Shutdown
MODULE	----	Abnormary in Module microcomputer communication
MA-SRL		Abnormary in 3-wire Serial Communication of the Main microcomputer.
	IF	Communication failure of IF microcomputer
	MULTI1	MANTA communication failure(MULIT1)
	I/P	MANTA communication failure(I/P)
	D-SEL	MANTA communication failure(D-SEL)
MA-IIC		Abnormary in Main microcomputer IIC communication
	FE1	Analog Tuner 1(Front End 1)
	FE2 *	Analog Tuner 2(Front End 2)
	MPX	MPX
	AV-SW	AV Switch
	RGB-SW	RGB Switch
	CCD *	CCD
	GCR *	GCR
	M-VDEC	Main VDEC
	S-VDEC	Sub VDEC
	ADC	AD/PLL
	HDMI	HDMI
	PLK-T	TMDS Tx
	PLK-R	TMDS Rx
	TX-COM	M2 Communication
	TX-BSY	M2 Busy
	MA-EEP	64k EEPROM
MAIN		Abnormary in Main microcomputer communication
FAN		Fan stopped
TEMP2		Abnormally high temperature of the MR.
DTUNER		Failure of the Digital Tuner
	PS/RST	Failure in DTB Starting
	RETRY	DTB communication failure
M-DCDC		Power decrease of the DC-DC converter (only for SX model)
HOME-G		Failure of the Home Gallery
	CD-COM	PC Card Communication failure
	CD-DEV	Requirement for resetting from the PC Card
	CD-RST	PC Card reset failure

*: Not available

4. TEMPERATURE

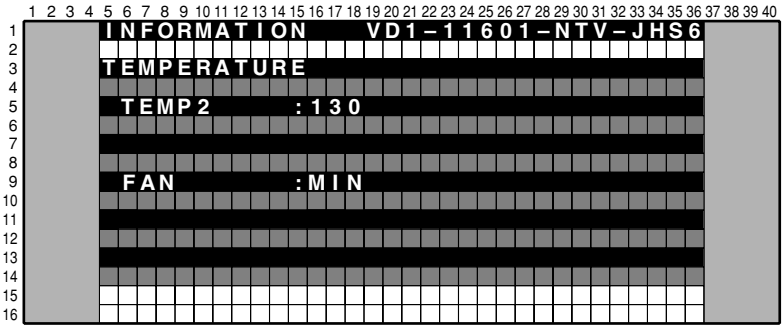

TEMP2 : The value read from the temperature sensor built into the Media Receiver is displayed in the range of 000-255. For reference, the approximate value for 60°C is 86 and for 35°C is 67.
Reference: When TEMP2 exceeds 100 (about 78°C), SD LED (Blue) flash 11 times.

FAN : The value of the Fan output is displayed.
STOP: stopped, MIN: slow speed, MAX: high speed

5. HOUR METER

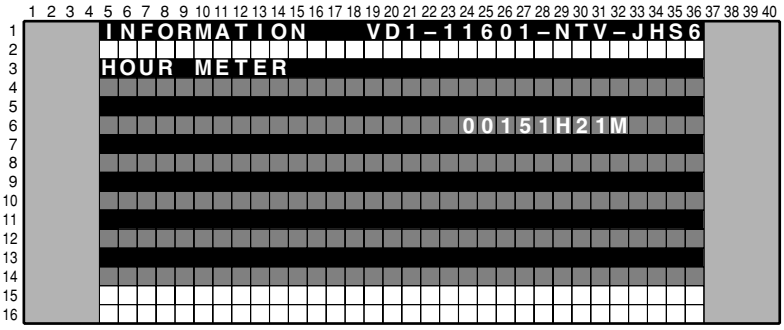

The cumulative power-on time of the Media Receiver is displayed.

6. HDMI SIGNAL INFO

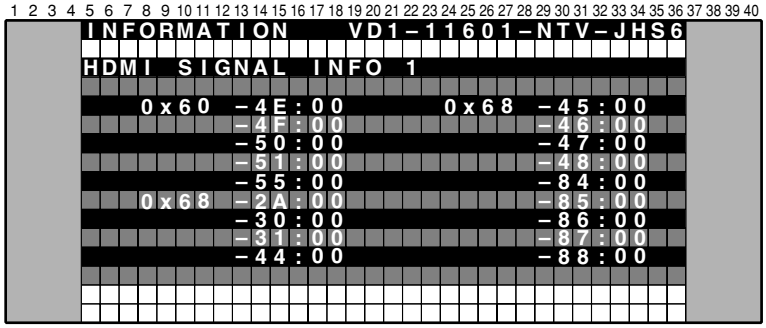

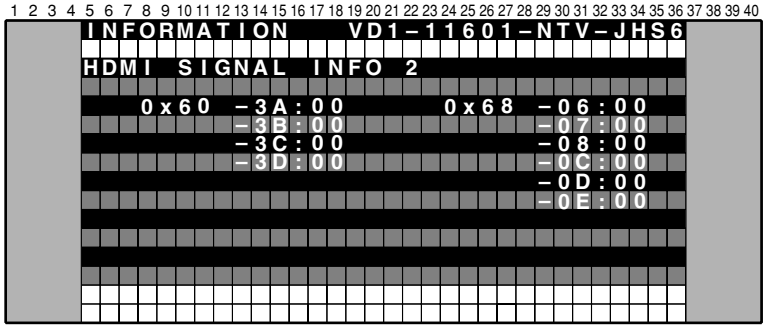

● **Technical examination display (Reading status registers in HDMI receiver and displaying them by HEX value.)**

HDMI SIGNAL INFO 1		
SA		**Context**
0x60	- 4E:	Video DE pixels [7:0]
	- 4F:	Video DE pixels [11:8]
	- 50:	Video DE lines [7:0]
	- 51:	Video DE lines [10:8]
	- 55:	Video status (interlace or progressive, sync polarity)
0x68	- 2A:	Audio in channel status (PCM, copy information etc.)
	- 30:	Audio in SPDIF channel status (sampling frequency)
	- 31:	Audio in SPDIF channel status (sample word length)
	- 44:	AVI InfoFrame data1 (video format etc.)
	- 45:	AVI InfoFrame data2 (colorimetry, aspect ratio)
	- 46:	AVI InfoFrame data3 (video scaling)
	- 47:	AVI InfoFrame data4 (video identification code)
	- 48:	AVI InfoFrame data5 (pixel repeat value for 2880dot)
	- 84:	Audio InfoFrame data1 (channel count, cording type)
	- 85:	Audio InfoFrame data2 (always zero)
	- 86:	Audio InfoFrame data3 (always zero)
	- 87:	Audio InfoFrame data4 (channel / speaker allocation)
	- 88:	Audio InfoFrame data5 (downmix inhibit, level shift value for downmixing)

HDMI SIGNAL INFO 2		
SA		**Context**
0x60	- 3A:	Video full H resolution [7:0]
	- 3B:	Video full H resolution [12:8]
	- 3C:	Video full V lines [7:0]
	- 3D:	Video full V lines [10:8]
0x68	- 06:	N Value for audio clock regeneration method. [7:0]
	- 07:	N Value for audio clock regeneration method. [15:8]
	- 08:	N Value for audio clock regeneration method. [19:16]
	- 0C:	CTS Value for audio clock regeneration method. [7:0]
	- 0D:	CTS Value for audio clock regeneration method. [15:8]
	- 0E:	CTS Value for audio clock regeneration method. [19:16]

7. TUNER SIGNAL INFO

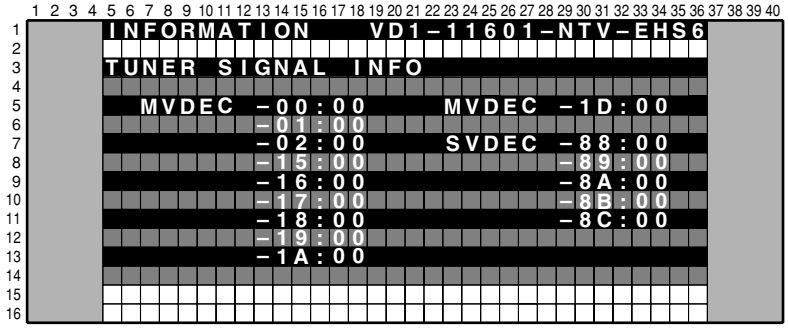

● Tuner signal information in MVDEC / SVDEC.

Device	SA	Context
MVDEC	00h	Signal distinction 1
	01h	Signal distinction 2
	02h	Flag detection output
	15h	Noise level detection 1
	16h	Noise level detection 2
	17h	Non - standard signal detection
	18h	Subcarrier signal detection
	19h	ACC data output
	1Ah	ACC information output
	1Dh	Input signal mode
SVDEC	88h	Status register 1 (TV/VCR status)
	89h	Status register 2 (Macrovision detection etc)
	8Ah	Status register 3 (Front-end AGC gain value)
	8Bh	Status register 4 (Subcarrier to horizontal (SCH) phase)
	8Ch	Status register 5 (signal distinction)

② FUNCTION CHECK

● **Operation items**

No.	Display	Content	RS-232C
1	FAN <=>	Control FAN speed for Force.	–
2	DTB ANT VOLT <=>	Change the power supply voltage for DTB antenna.	–

③ COMMON ADJ. mode

RGB1

Only for the technical use.

④ PANEL FACTORY mode

● **Operation items**

No.	Function / Display
1	PANEL INFORMATION
2	PANEL WORKS
3	POWER DOWN
4	SHUT DOWN
5	PANEL-1 ADJ
6	PANEL-2 ADJ
7	PANEL REVICE
8	ETC
9	MASK SETUP

Refer to the service manual of the PDP-506P/436P.

⑤ OPTION mode

● **Operation items**

No.	Function/Display	Content	RS-232C
1	PEAK LIMITTER ⇔	Control Peak Limitter (Select ON/OFF)	–
2	EDID WRITE MODE ⇔	Control EDID WRITE MODE (Select DISABLE/ENABLE)	–
3	CH PRESET ⇔	USER ⇔ FACTORY	–

⑥ INITIALIZE mode

● **Operation items**

No.	Function/Display	Content	RS-232C
1	SYNC DET(+)	Only for the technical use.	–
2	SG MODE ⇔	Paired SG_MODE with SG_PATTERN. Select SG Route.	–
3	SG PATTERN ⇔	Paired SG_MODE with SG_PATTERN. Select SG Pattern.	–
4	SIDE MASK LEVEL(+)	Adjust Side Mask Color(R,G,B).	BSL GSL RSL
5	FINAL SETUP(+)	Initialize flash memories on virgin product status	FST
6	SR+ ⇔	Select SR+ mode or UART SELECT mode.	–
7	UART SELECT ⇔	Select boud Rate on RS-232C Communication	–
8	CVT AUTO ⇔	Only for the productical use.	–
9	HDMI INTR POSITION(+)	Only for the technical use.	–

1. SYNC DET(+)

Only for the technical use.

2. SG MODE

The route of the Test Signal from the MVDEC is chosen by this function.
After setting this function, SG pattern should be set.

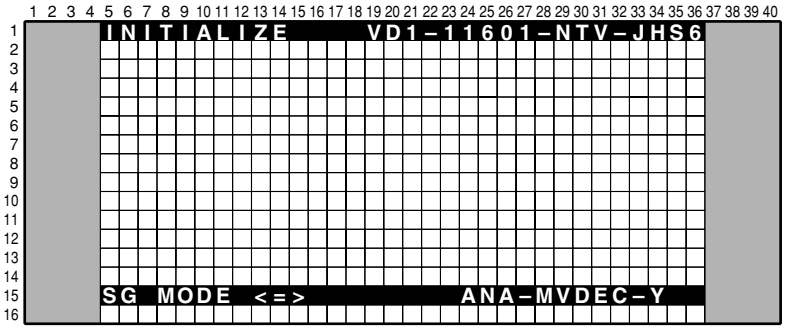

No.	Display	Function
1	SG OFF	SG is set to OFF
2	DIG MVDEC YCBCR	Digital output (YCbCr)
3	ANA MVDEC Y	Analog output to the Videio SW (Y)
4	ANA MVDEC RGB	SCART (PDP-R06XE only)
5	ANA SVDEC Y	Analog output to the SUB Videio SW(Y)
6	ANA AD YCBCR	Analog output to the RGB SW (YCbCr)
7	ANA AD RGB	Analog output to the RGB SW (RGB)

3. SG PATTERN

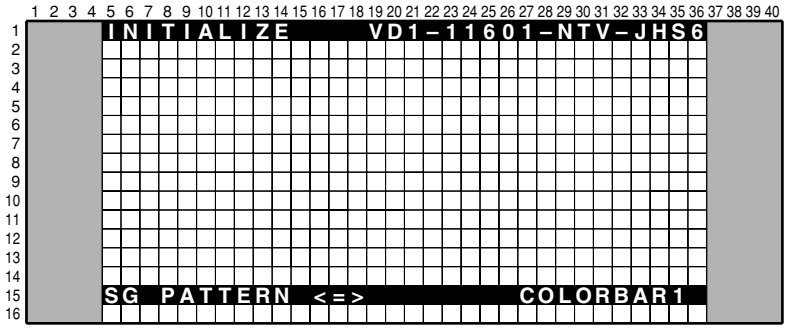

No.	Function/Display	SG Pattern (Brightness IRE Level/Color)	No.	Function/Display	SG Pattern (Brightness IRE Level/Color)
1	COLOR BAR1	Colorbar(75%)	11	RASTER4	Raster(75% Green)
2	COLOR BAR2	Colorbar(100%)	12	RASTER5	Raster(75% Magenta)
3	RAMP1	Ramp(100% white)	13	RASTER6	Raster(75% Red)
4	RAMP2	Ramp(100% Yellow)	14	RASTER7	Raster(75% Blue)
5	RAMP3	Ramp(75% Green)	15	RASTER8	Raster(-% Black)
6	RAMP4	Ramp(75% Red)	16	10STEP1	10STEP(100% white)
7	RAMP5	Ramp(75% Blue)	17	10STEP2	10STEP(100% Yellow)
8	RASTER1	Raster(100% White)	18	10STEP3	10STEP(75% Green)
9	RASTER2	Raster(75% Yellow)	19	10STEP4	10STEP(75% Red)
10	RASTER3	Raster(75% Cyanide)	20	10STEP5	10STEP(75% Blue)

Important notice of the Test Signal mode (SG mode, SG pattern)

- The route switching should be done correctly in the factory mode.
- Y or G signal from SG should be input to the AVI terminal of the MVDEC when the SG signal is output.
- The function of the blanking offset (50 IRE) should be OFF during the SG mode.
- The setting of the Y/C separation function should be set to the NTSC during the SG mode
- Only the RGB and Component signals can be output during SG mode, so only the Y signal is input at the CVBS and S signal mode, thus the picture is composed in black and white color. This isn't a trouble.
- The SG mode 7 (ANA AD RGB) is only for the factory mode. Therefore some probrem (strange color, unstable brightness etc.) might be happened.

4. SIDE MASK LEVEL

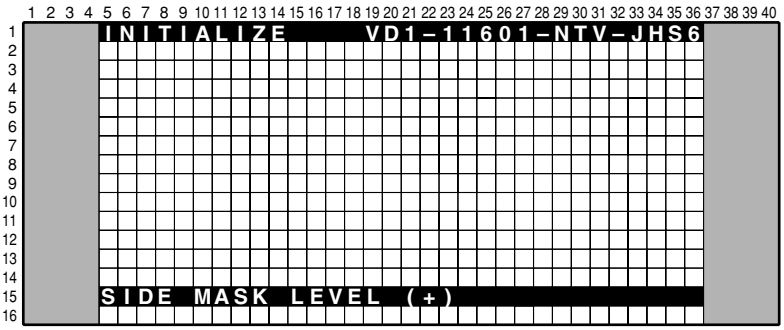

Level of the side mask (R, G, and B) can be adjusted by using this menu.
The input signal is necessary to adjust it.

No.	Display	Context	RS-232C
1	R MASK LEVEL ⇔	Adjust Side Mask R (range :000-255)	RSL
2	G MASK LEVEL ⇔	Adjust Side Mask G (range :000-255)	GSL
3	B MASK LEVEL ⇔	Adjust Side Mask B (range :000-255)	BSL

5. FINAL SETUP

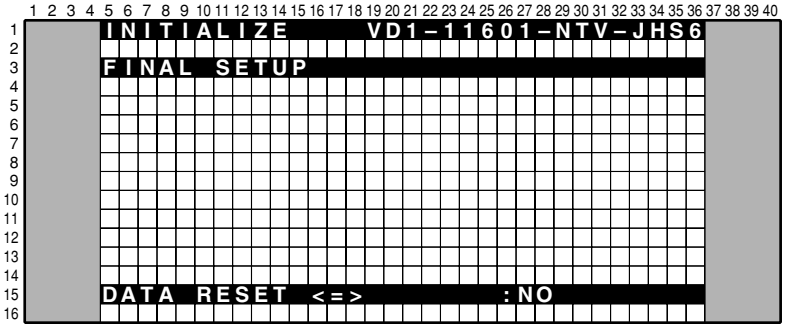

The value of all memorized data are set to shipment status. If the ENTER key is kept on pressing for 5 second when the status of this menu is YES, final setup will be done.

6. SR+

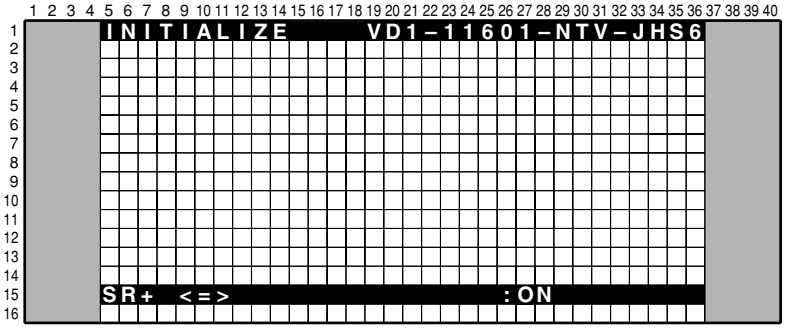

SR+ function → ON, RS232C function → OFF

7. UART SELECT

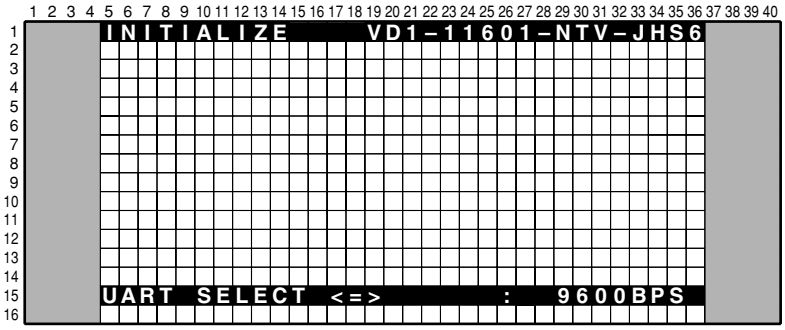

This function can be selected when the SR+ function is OFF.

Option No.	Display	Operation / Control	RS-232C
1 (Initial setting)	----	To Set to SR+ (9600bps)	SR+ is ON
2	1200	To Set to RS-232C (1200bps)	SR+ is OFF
3	2400	To Set to RS-232C (2400bps)	SR+ is OFF
4	4800	To Set to RS-232C (4800bps)	SR+ is OFF
5	9600	To Set to RS-232C (9600bps)	SR+ is OFF
6	19200	To Set to RS-232C (19200bps)	SR+ is OFF
7	38400	To Set to RS-232C (38400bps)	SR+ is OFF

6.5 LIST OF RS-232C COMMANDS (MEDIA RECEIVER)

RS-232C commands can be used in Service Factory mode. Before using RS-232C commands, it is necessary to change the factory presetting. See " 6.2 USING RS-232C COMANDS".
Refer to the service manual of the PDP506P/406P for the panel command.
[Note : If you want to see version information (ex. QS1, QS6, Factory, Menu), Please see 10 seconds after starting.]

Command	Operation	Remarks
B		
BSL	Adjust side mask B	
C		
CNG	Clearing MR NG information	
CHR	Clearing MR Hour meter	
D		
DW*	Decreasing the adjustment value by*	*:1-9, 0(0 means 10),F(making the adjustment value the minimum)
F		
FAN	Turning Service Factory mode off.	
FAY	Turning Service Factory mode on.	
FST	Final Set Up	
G		
GSL	Adjust side mask side mask G	
I		
INA	Selection of tuner for terrestrial analog signals.	PDP-R06XE only
INC***	Selection of tuner for terrestrial digital signals	PDP-R06XE only
INH	Selection of SD card/PCMCIA card	PDP-R06XE only
INPS01	Input selection: input 1	
INPS02	Input selection: input 2	
INPS03	Input selection: input 3	
INPS04	Input selection: input 4	
INPS05	Input selection: input 5	
INPS06	Input selection: input 6	PDP-R06XE only
O		
OSDS00	Turning the On-Screen Display off	Prohibit On-Screen Display.
OSDS01	Turning the On-Screen Display on	Permit On-Screen Display.
P		
POF	Turning the power off.	
PON	Turning the power on.	
Q		
QS1	Obtaining the version data for each device.	
QS6	Obtaining the any version.	
QMT	Obtaining the MR temperature information.	
QNG	Obtaining NG data of the MR.	
R		
RSL	Adjust side mask side mask R	
U		
UP*	Increasing the adjustment value by *	*:1-9, 0(0 means 10),F(making the adjustment value the maximum)
Z		
ZME	Initializing of the EEPROM video data	

6.6 OUTLINE OF COMMANDS

QS1: Returning information on the module and the version of the software.

Order	Part	Data Content	Size	Remarks
0	-	Received Command Name on MR	3 byte	'QS1' only
1	MDU	Display Information 1	1 byte	
2		Display Information 2	1 byte	
3		Display Information 3	1 byte	
4		Display Information 4	1 byte	
5		Display Information 5	1 byte	
6		Boot Version of Module microcomputer.	3 byte	
7		Program Version of Module microcomputer.	8 byte	
8		Boot Version of ASTRA-MANTA	3 byte	
9		Program Version of ASTRA-MANTA	8 byte	
10		Sequence Version (43VIDEO)	4 byte	
11		Sequence Version (43PC)	4 byte	
12		Sequence Version (50VIDEO)	4 byte	
13		Sequence Version (50PC)	4 byte	
14	MR	, (comma)	1 byte	
15		MR Infomation 1	1 byte	
16		MR Infomation 2	1 byte	
17		MR Infomation 3	1 byte	
18		MR Infomation 4	1 byte	
19		Version of IF microcomputer	4 byte	
20		Version of Main microcomputer	8 byte	
21		Boot Version of Main microcomputer	4 byte	
22		Program Version of CARRERA-MANTA	8 byte	
23		Boot Version of CARRERA-MANTA	4 byte	
24		GUI Version of CARRERA-MANTA	8 byte	
25		Enhanced Version of CARRERA-MANTA	8 byte	
26		PIC Version of CARRERA-MANTA	8 byte	

QS6: Returning information of the Flash Device.

Order	Data Content	Size	Remarks
0	Received Command Name on MR	3 byte	'QS6' only
1	Version of DTB (PDP-R06XE only)	4 byte	
2	Version of PC Card (PDP-R06XE only)	8 byte	
3	Version of Text	60 byte	
4	User Passward	4 byte	

QMT: Returning information of MR temperature and FAN speed.

Order	Data Content	Size	Remark
1	Received Command Name on MR	3 byte	'QMT' only
2	MR Temperature	3 byte	
3	MR FAN Speed	1 byte	0: STOP 1: MIN 2: MAX

QNG: Returning data (logs keep on Main microcomputer) on shutdown of Media Receiver.

Order	Data	Size	Context
0	Received Command Name on MR	3 byte	'QNG' only
1	Latest NG data	1 byte	
2	Data of subcategory for the latest NG	1 byte	
3	Data of MR hour meter for the latest NG	7 byte	
4	Data of temperature for the latest NG	3 byte	
5	2nd latest NG data	1 byte	
6	Data of subcategory for the 2nd latest NG	1 byte	
7	Data of MR hour meter for the 2nd latest NG	7 byte	
8	Data of temperature for the 2nd latest NG	3 byte	
:	:	:	
29	7th latest NG data	1 byte	
30	Data of subcategory for the 8th latest NG	1 byte	
31	Data of MR hour meter for the 8th latest NG	7 byte	
32	Data of temperature for the 8th latest NG	3 byte	

• Details on the NG data and subcategory

Data	Cause of Shutdown	Remarks
0	Normal	
1	Failure of communication to Module microcomputer	
2	3-wire Serial Communication of Main microcomputer.	Subcategory ⇒ 1
3	IIC Communication failure of Main microcomputer	Subcategory ⇒ 2
4	Communication failure of Main microcomputer &Unknown Error	
5	Fan stopped	
6	Abnormally high temperature at MR.	
7	Failure of Digital Tuner	Subcategory ⇒ 3
8	Abnormally in RST2 of MR(power decrease of DC-DC converter)	
9	Failure at Home Gallary	Subcategory ⇒ 4

• Data on Subcategories for failure in 3-wire serial communication of Main microcomputer (subcategory 1)

Data	Cause of Shutdown	Remarks
0	Non subcategory	
1	Communication failure of IF microcomputer	Power OFF
2	MANTA communication failure(MULIT1)	Power OFF
3	MANTA communication failure(MULIT2)	Reserved
4	MANTA communication failure(I/P)	
5	MANTA communication failure(D-SEL)	

• Data on Subcategories for failure in IIC communication of Main microcomputer (subcategory 2)

Data	Cause of Shutdown	Data	Cause of Shutdown
0	Non subcategory	A	AD/PLL
1	Analog Tuner 1(Front End 1)	B	HDMI
2	Analog Tuner 2(Front End 2)	C	TMDS Tx
3	MPX	D	TMDS Rx
4	AV Switch	E	M2 Communication
5	RGB Switch	F	M2 Busy
6	CCD	G	64k EEPROM
7	GCR		
8	Main VDEC		
9	Sub VDEC		

• Data on Subcategories for failure in the DTB communication of Main microcomputer (subcategory 3)

Data	Cause of Shutdown	Remarks
0	Non subcategory	
1	Failure to DTB Starting	
2	Communication failure to DTB	

• Data on Subcategories for failure in the Home Gallery communicaion of Main microcomputer (subcategory 4)

Data	Cause of Shutdown	Remarks
0	Non subcategory	
1	Failure of PC Card Communication	
2	Failure of PC Card	
3	PC Card Reset NG	

7. GENERAL INFORMATION

7.1 DIAGNOSIS

7.1.1 TROUBLESHOOTING

● No composite or S-video input pictures displayed

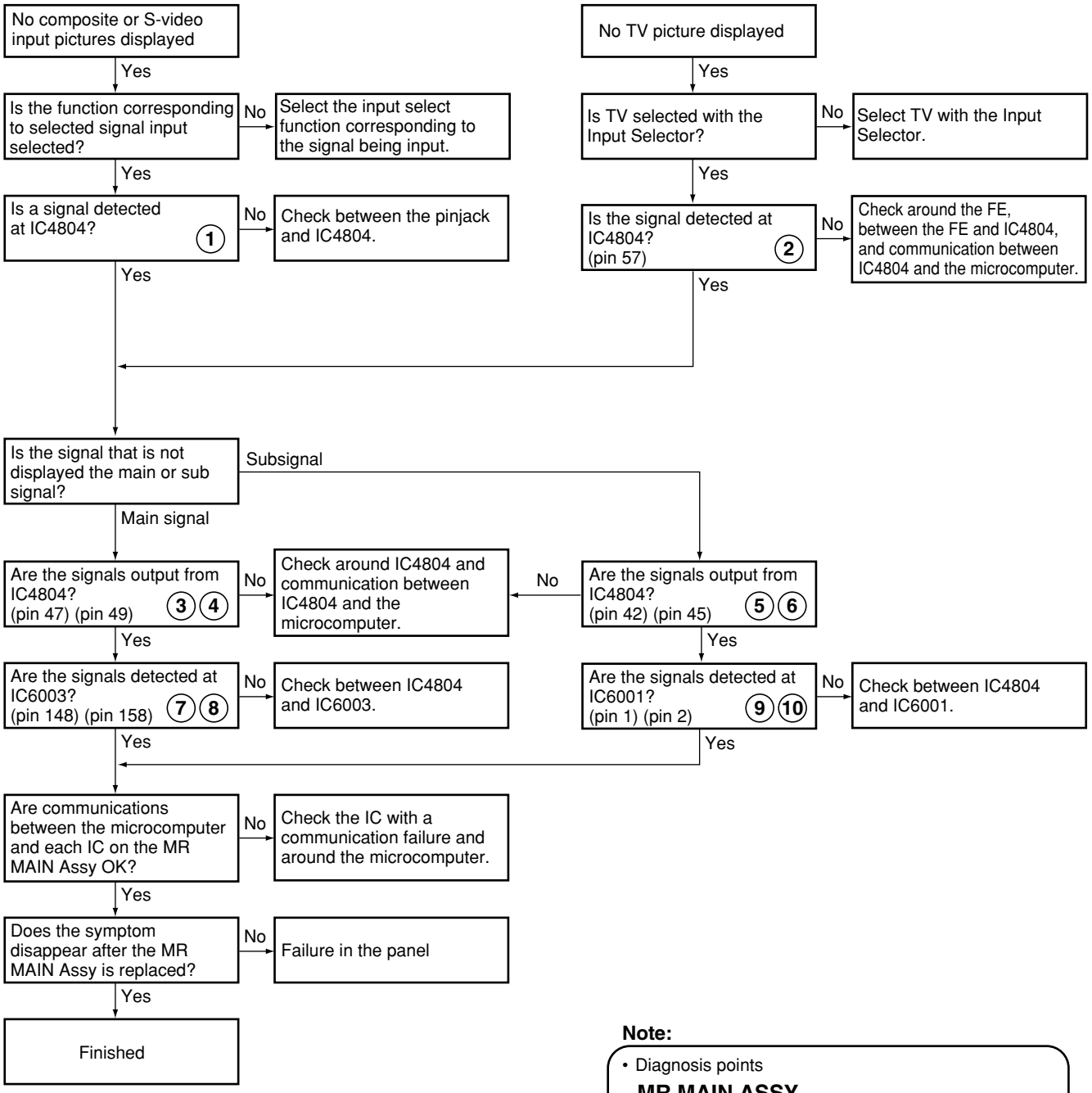

Note:

- Diagnosis points

  MR MAIN ASSY

- For check the communication with the microcomputer, refer to the section 6.3 SERVICE FACTORY MODE.
- The encircled numbers denote measuring point in the Waveforms for Troubleshooting.

● No picture from the SCART connector displayed

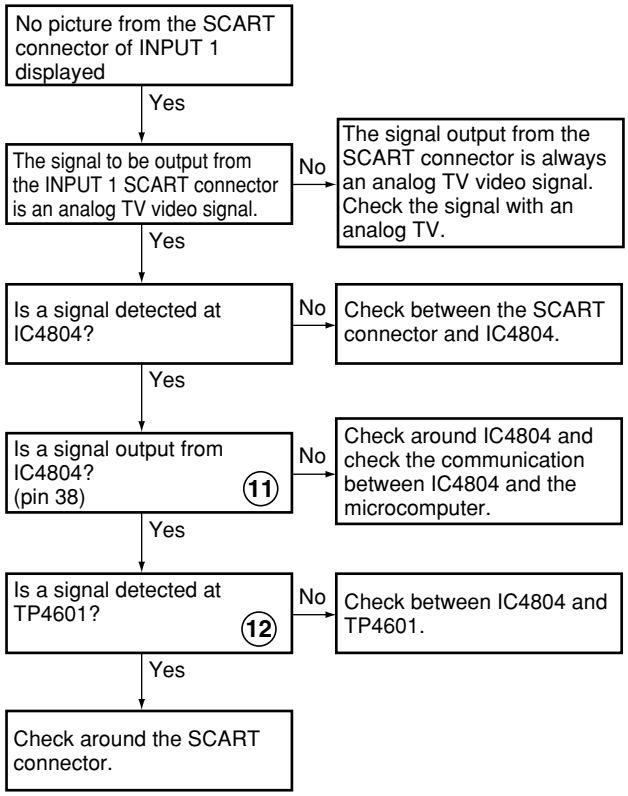

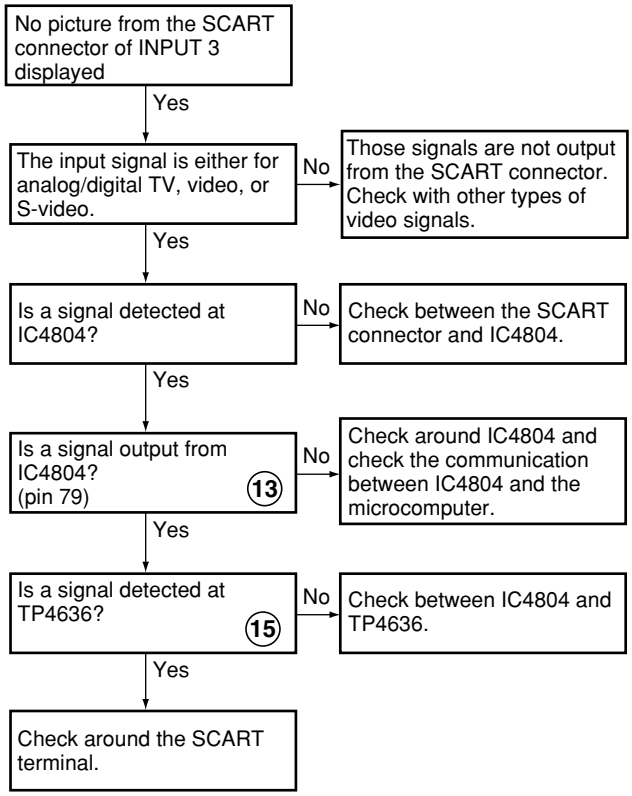

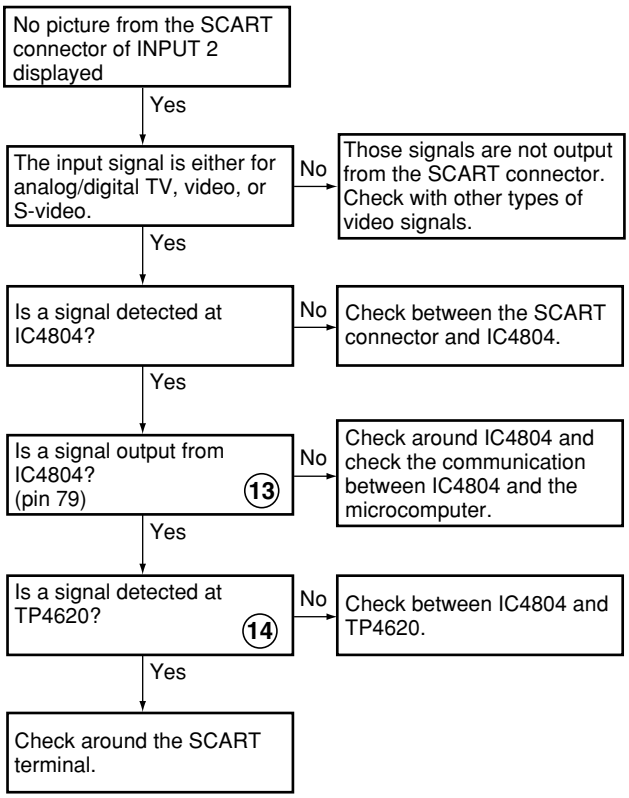

● No picture displayed when using the Home Gallery function

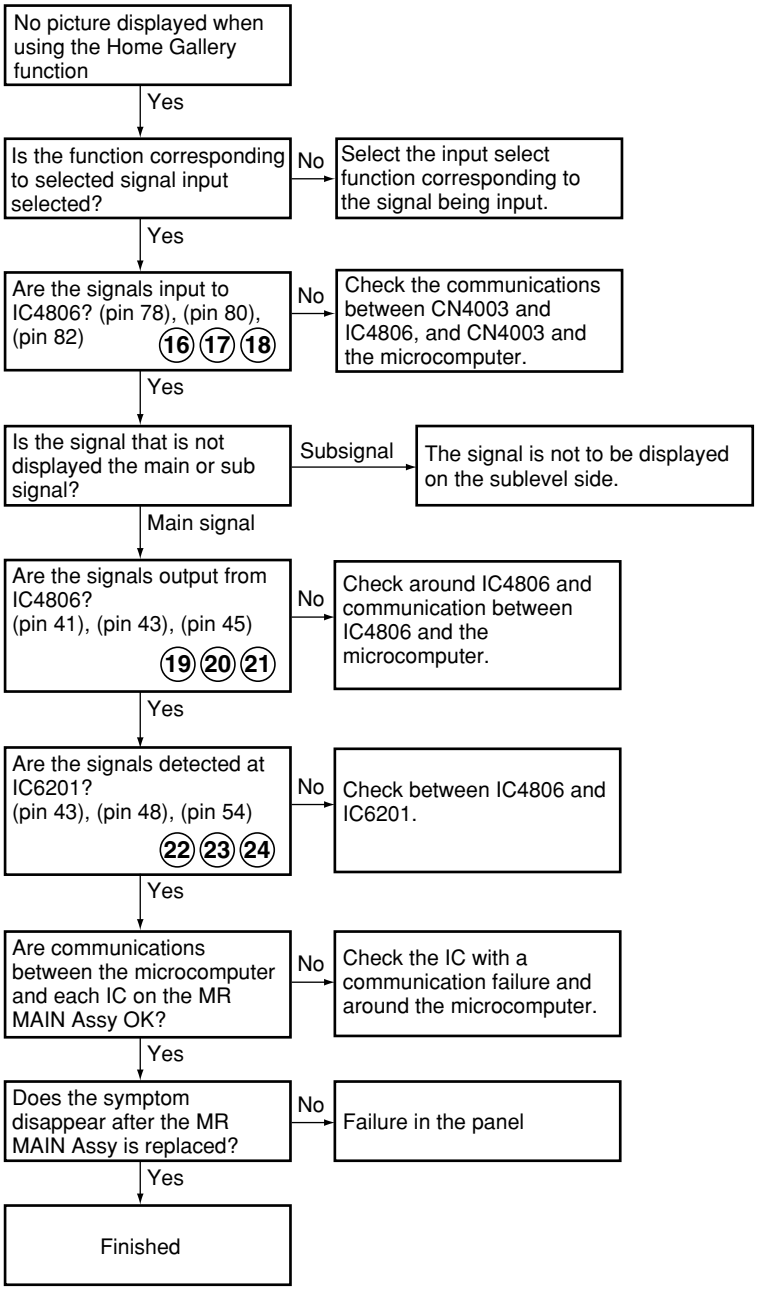

● No component video picture displayed and No picture from the PC displayed

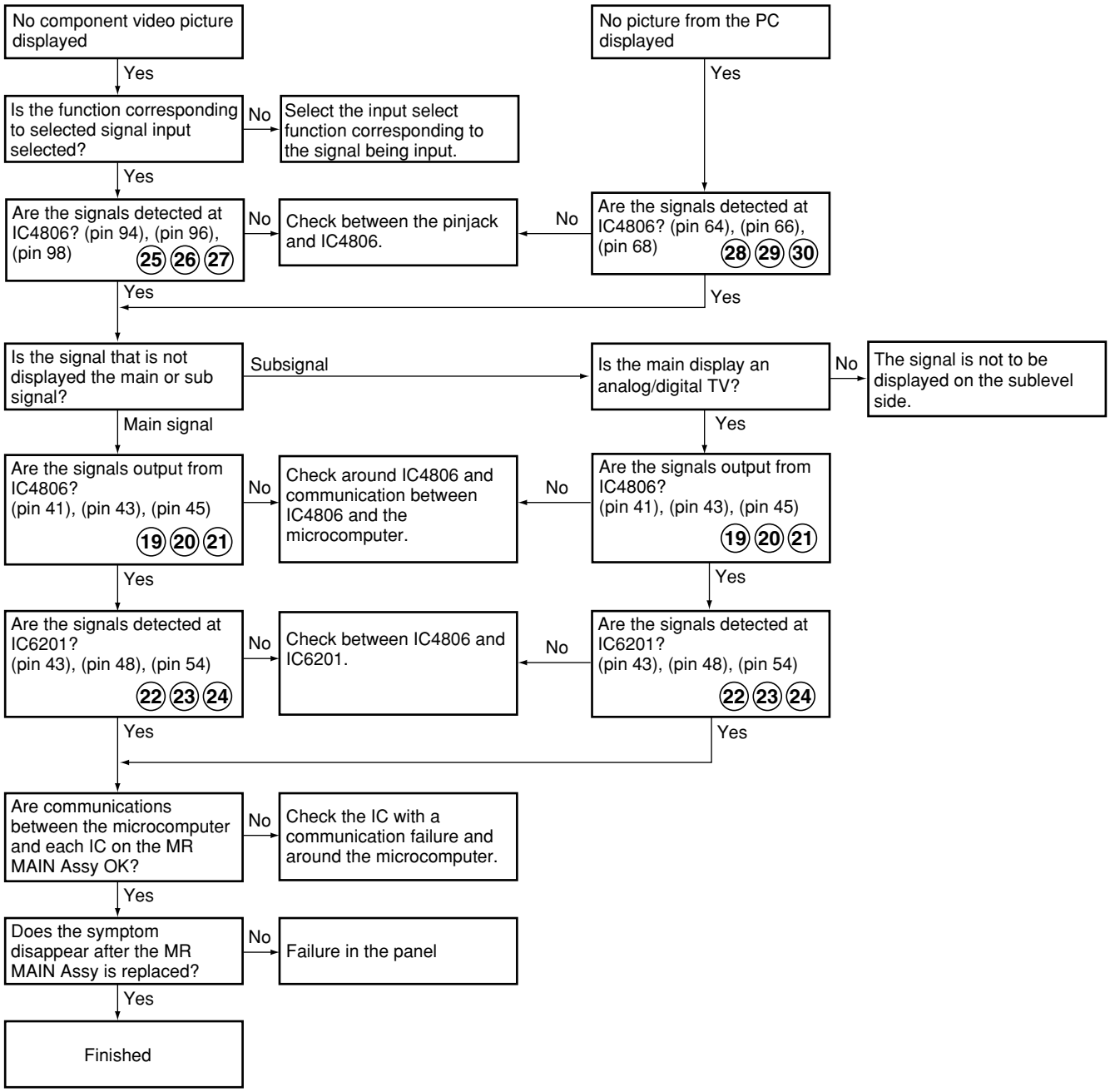

● No picture displayed when an RGB signal is input

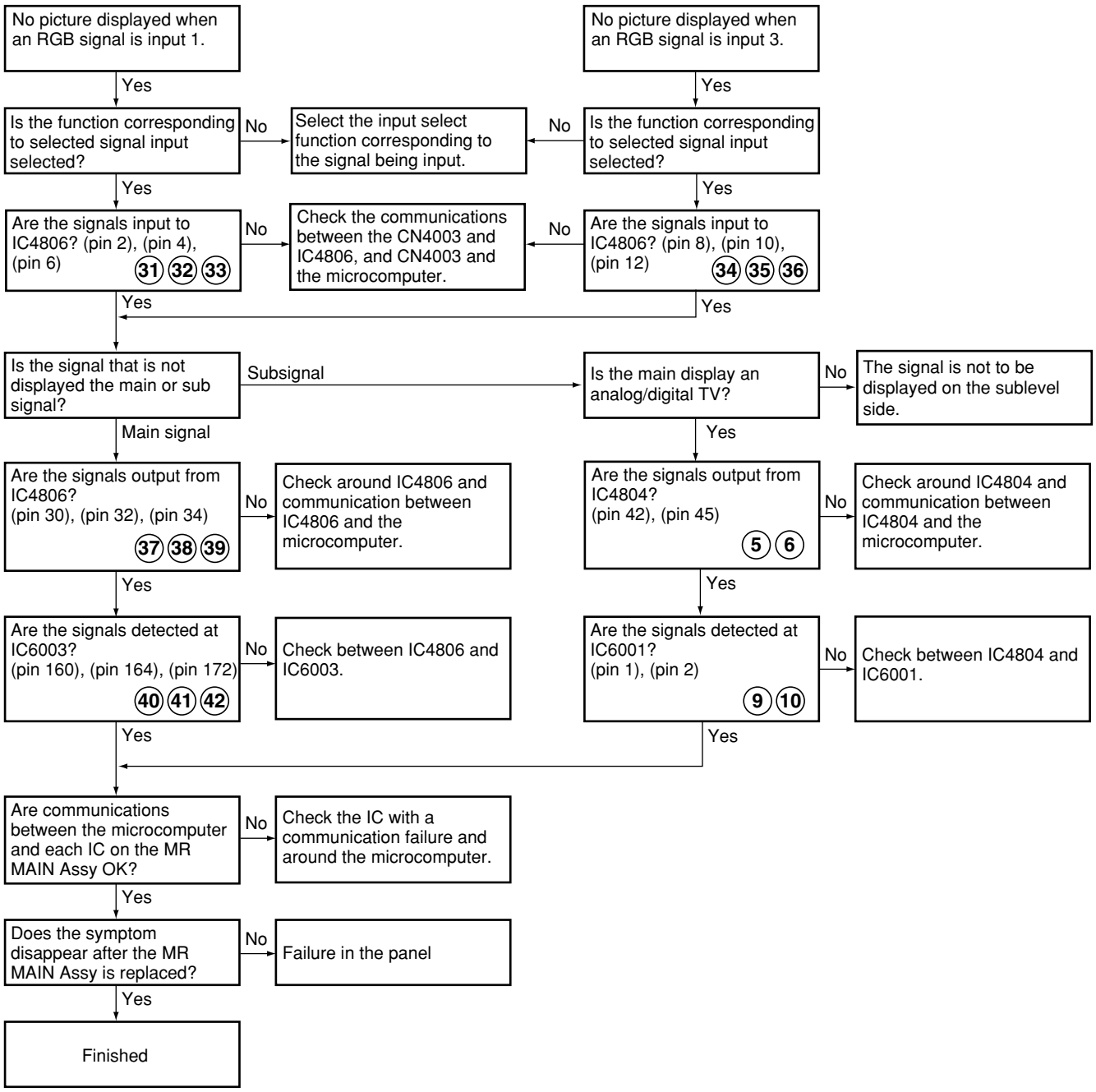

● No sound from the headphones and audio output

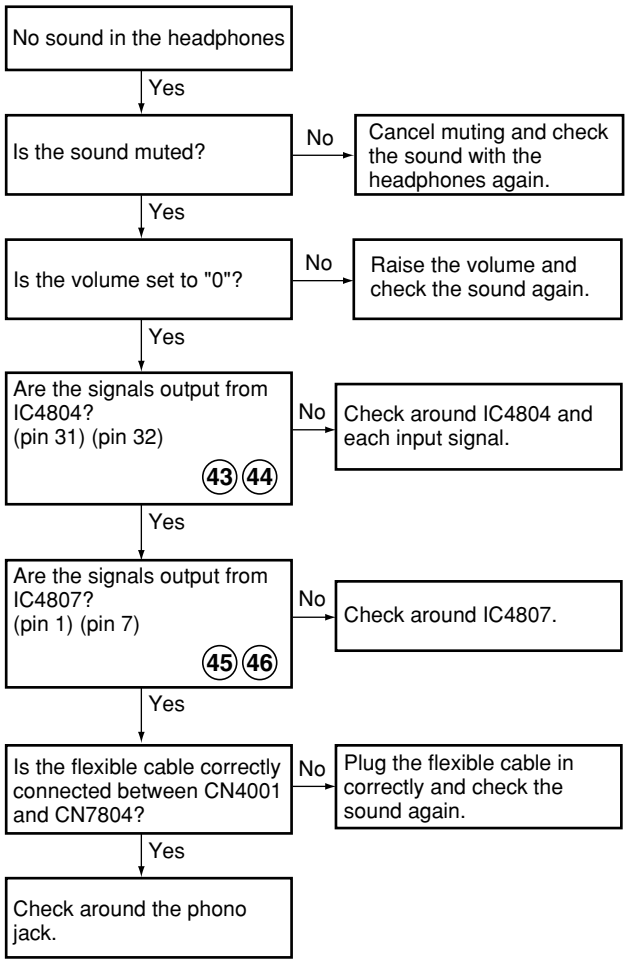

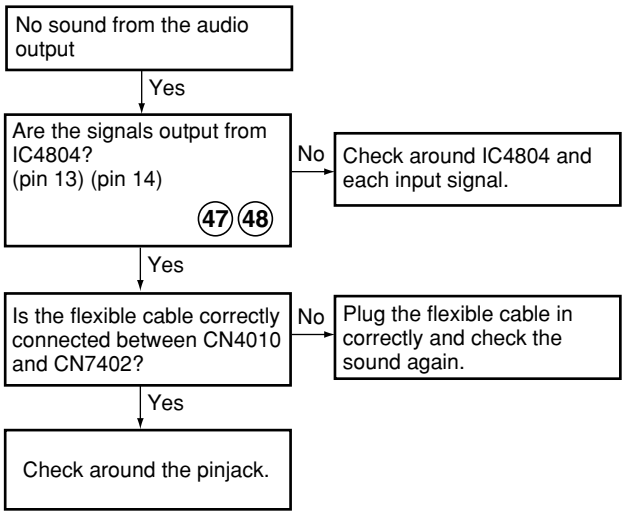

● No sound from the speakers (1/2)

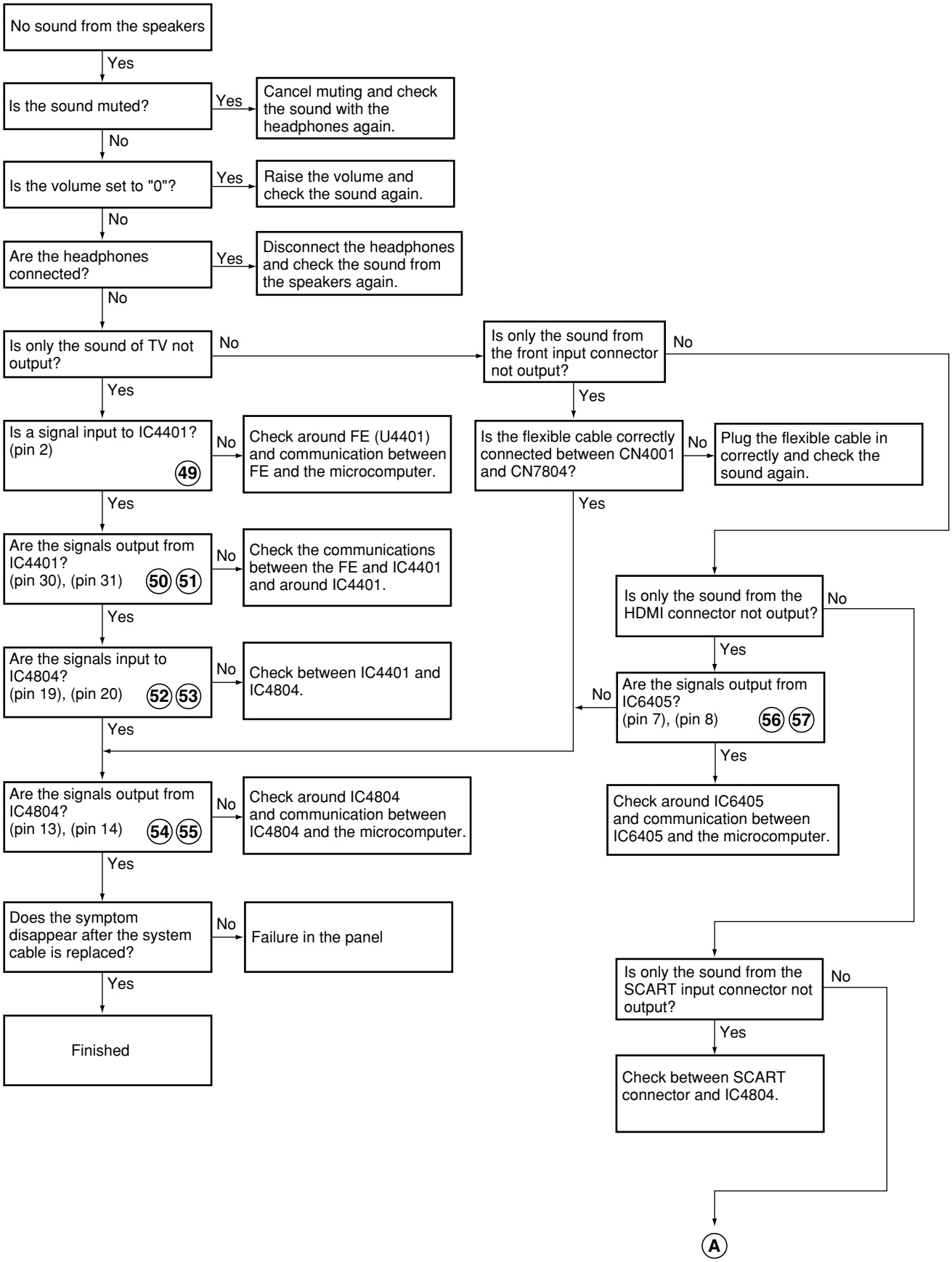

● No sound from the speakers (2/2)

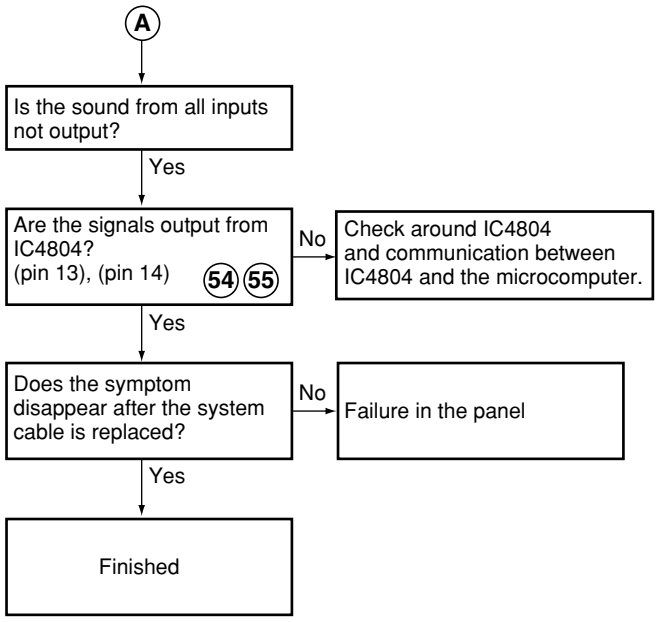

● No sound from the subwoofer

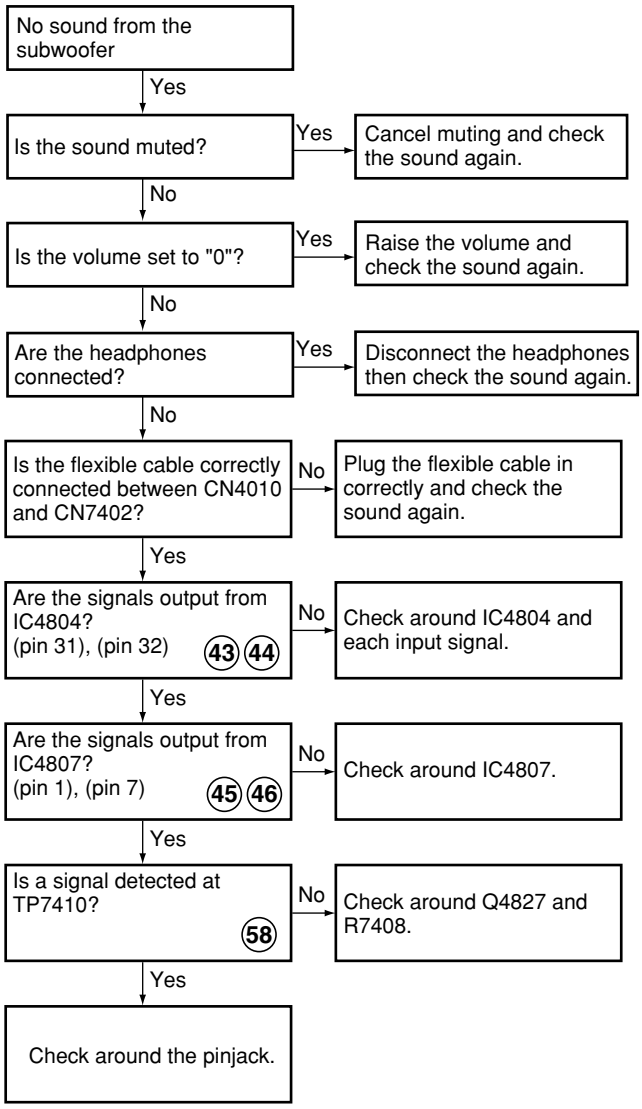

● The DTB (Digital Terrestrial Board) does not function

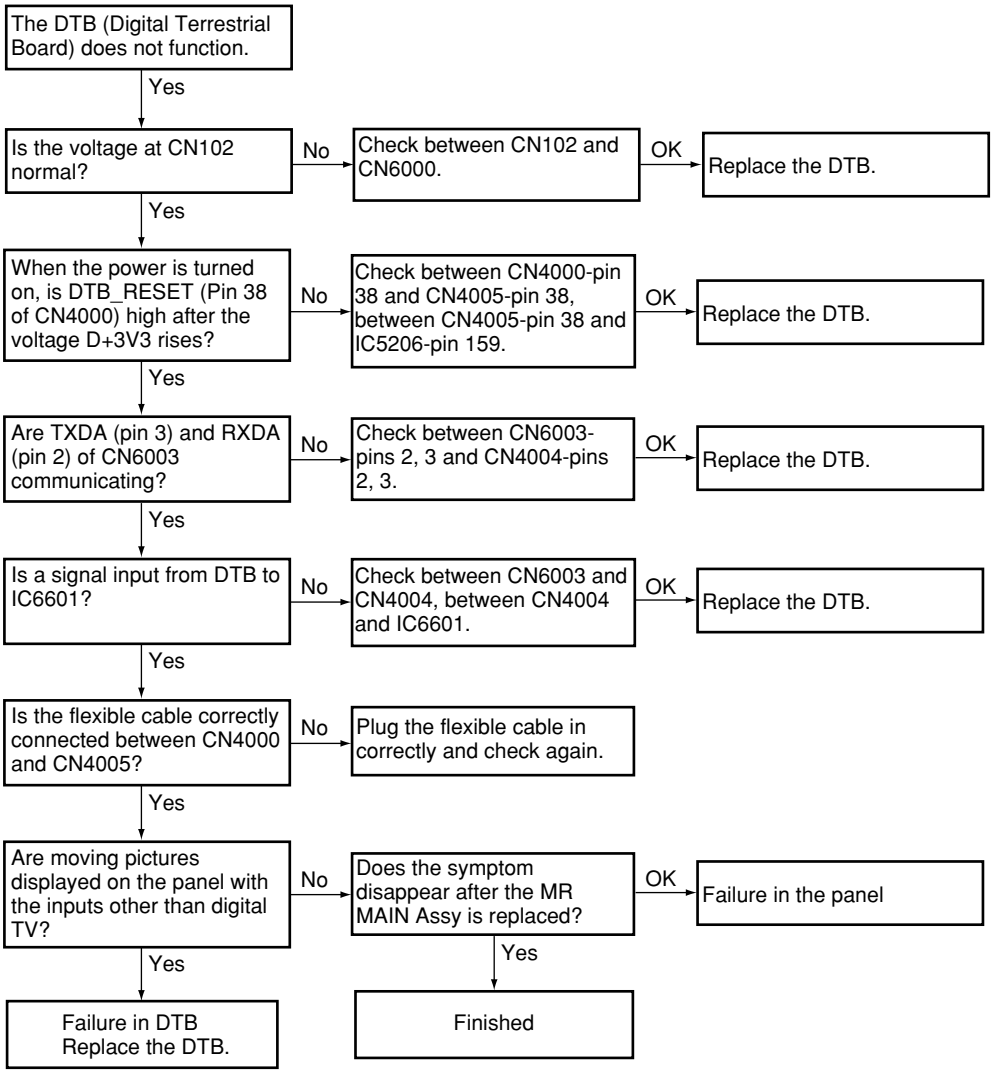

● Waveforms for Troubleshooting

MR MAIN ASSY

1 IC4804
V: 500mV/div. H: 20µsec/div.

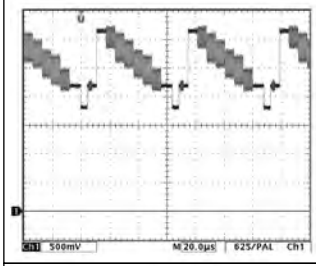

6 IC4804-pin 45
V: 500mV/div. H: 20µsec/div.

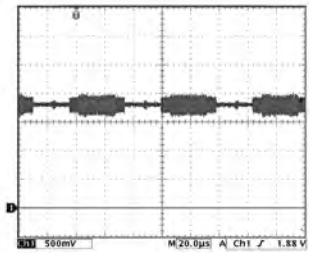

11 IC4804-pin 38
V: 1V/div. H: 20µsec/div.

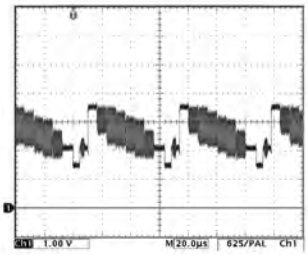

16 IC4806-pin 78
V: 500mV/div. H: 4µsec/div.

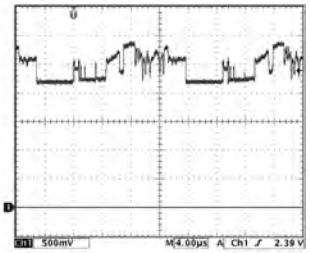

2 IC4804-pin 57
V: 500mV/div. H: 20µsec/div.

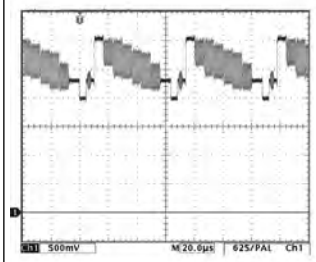

7 IC6003-pin 148
V: 500mV/div. H: 20µsec/div.

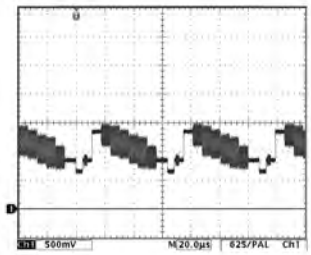

12 TP4601
V: 500mV/div. H: 20µsec/div.

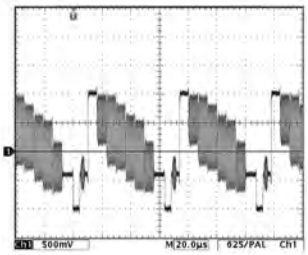

17 IC4806-pin 80
V: 500mV/div. H: 4µsec/div.

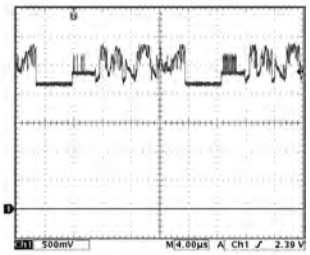

3 IC4804-pin 47
V: 500mV/div. H: 20µsec/div.

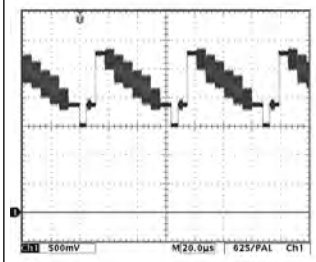

8 IC6003-pin 158
V: 500mV/div. H: 20µsec/div.

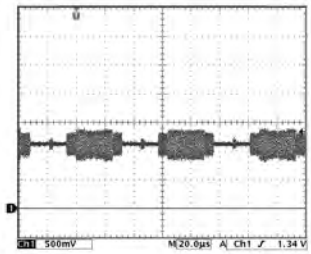

13 IC4804-pin 79
V: 1V/div. H: 20µsec/div.

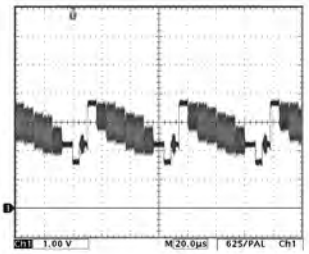

18 IC4806-pin 82
V: 500mV/div. H: 4µsec/div.

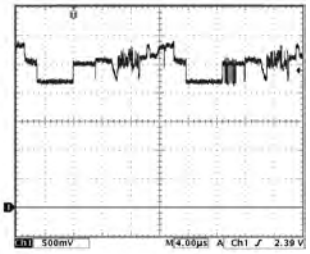

4 IC4804-pin 49
V: 500mV/div. H: 20µsec/div.

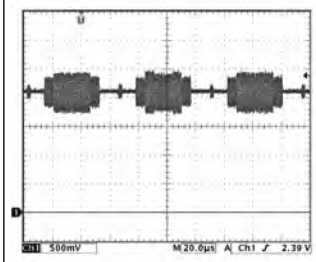

9 IC6001-pin 1
V: 500mV/div. H: 20µsec/div.

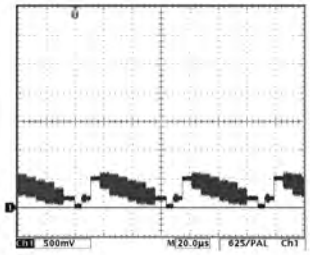

14 TP4620
V: 500mV/div. H: 20µsec/div.

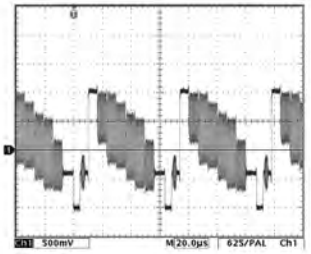

19 IC4806-pin 41
V: 500mV/div. H: 4µsec/div.

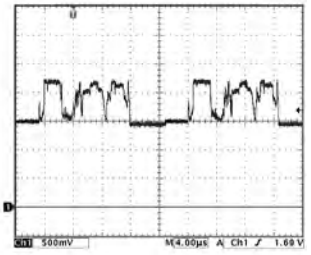

5 IC4804-pin 42
V: 500mV/div. H: 20µsec/div.

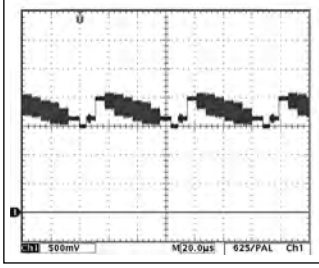

10 IC6001-pin 2
V: 500mV/div. H: 20µsec/div.

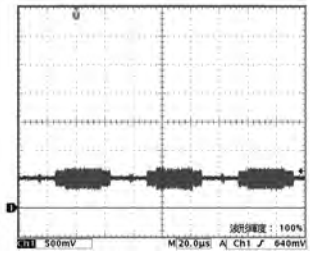

15 TP4636
V: 500mV/div. H: 20µsec/div.

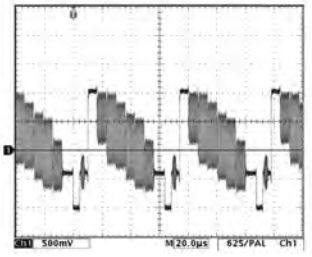

20 IC4806-pin 45
V: 500mV/div. H: 4µsec/div.

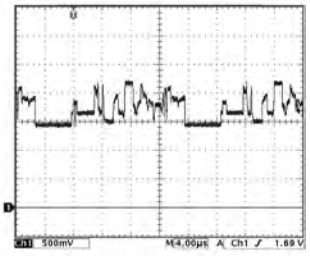

A

B

C

D

E

F

21 **IC4806-pin 45**
V: 500mV/div. H: 4µsec/div.

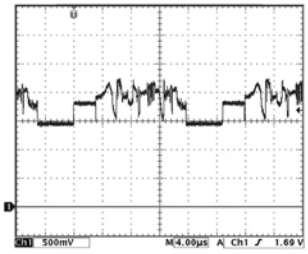

26 **IC4806-pin 96**
V: 500mV/div. H: 10µsec/div.

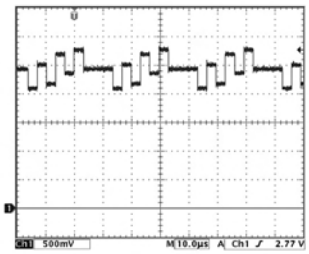

31 **IC4806-pin 2**
V: 500mV/div. H: 20µsec/div.

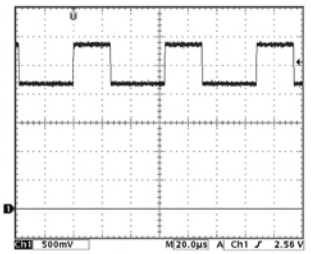

36 **IC4806-pin 12**
V: 500mV/div. H: 20µsec/div.

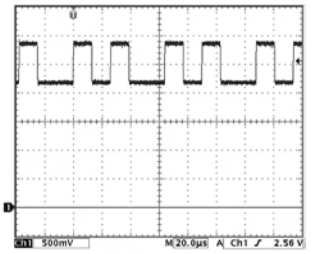

22 **IC6201-pin 43**
V: 500mV/div. H: 4µsec/div.

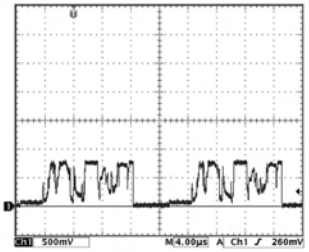

27 **IC4806-pin 98**
V: 500mV/div. H: 10µsec/div.

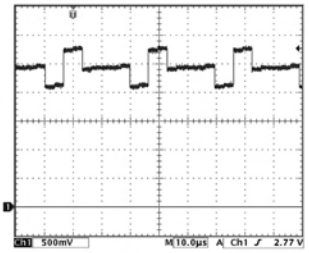

32 **IC4806-pin 4**
V: 500mV/div. H: 20µsec/div.

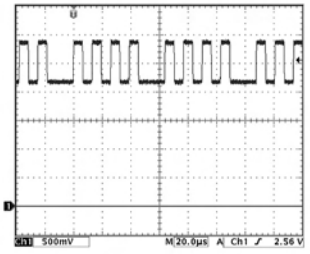

37 **IC4806-pin 30**
V: 500mV/div. H: 20µsec/div.

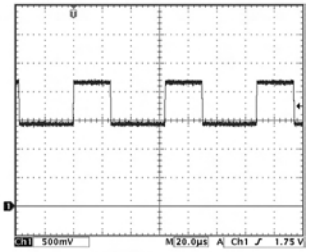

23 **IC6201-pin 48**
V: 500mV/div. H: 4µsec/div.

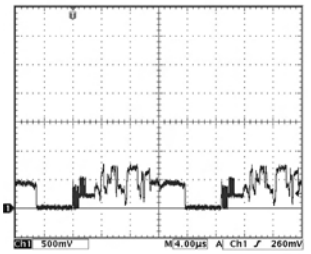

28 **IC4806-pin 64**
V: 500mV/div. H: 10µsec/div.

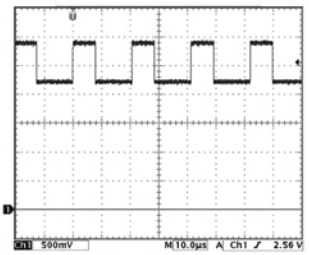

33 **IC4806-pin 6**
V: 500mV/div. H: 20µsec/div.

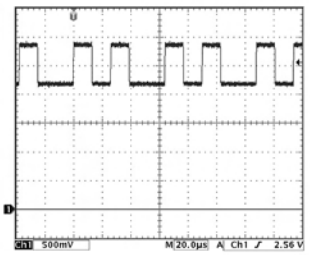

38 **IC4806-pin 32**
V: 500mV/div. H: 20µsec/div.

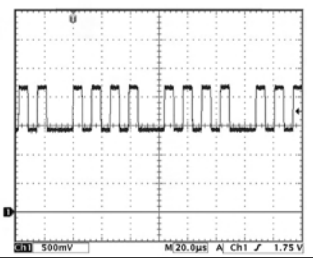

24 **IC6201-pin 54**
V: 500mV/div. H: 4µsec/div.

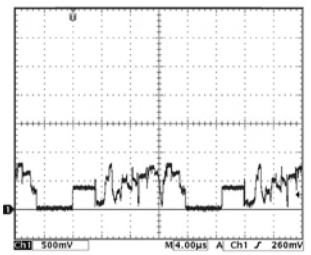

29 **IC4806-pin 66**
V: 500mV/div. H: 10µsec/div.

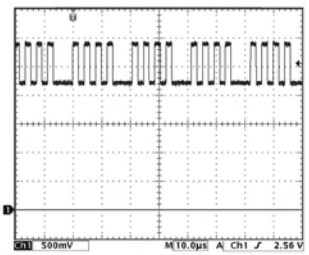

34 **IC4806-pin 8**
V: 500mV/div. H: 20µsec/div.

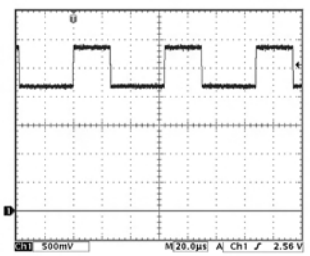

39 **IC4806-pin 34**
V: 500mV/div. H: 20µsec/div.

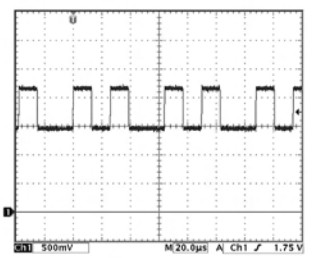

25 **IC4806-pin 94**
V: 500mV/div. H: 10µsec/div.

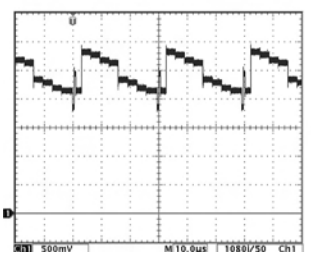

30 **IC4806-pin 68**
V: 500mV/div. H: 10µsec/div.

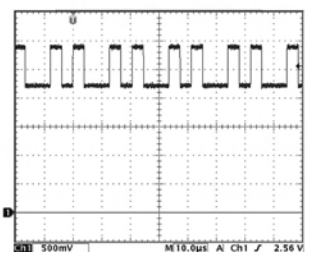

35 **IC4806-pin 10**
V: 500mV/div. H: 20µsec/div.

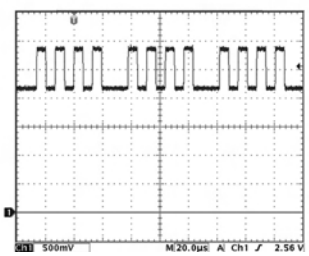

40 **IC6003-pin 160**
V: 500mV/div. H: 20µsec/div.

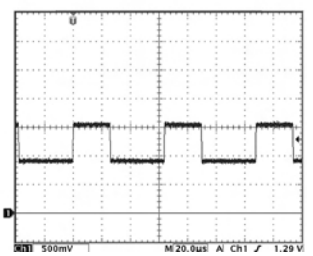

41 **IC6003-pin 164**
V: 500mV/div. H: 20µsec/div.

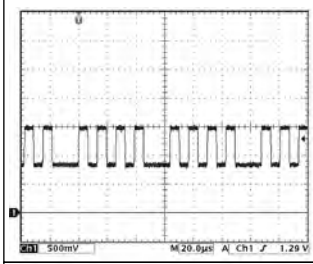

42 **IC6003-pin 172**
V: 500mV/div. H: 20µsec/div.

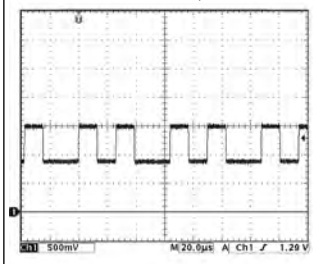

43 **IC4804-pin 31**
V: 50mV/div. H: 100msec/div.

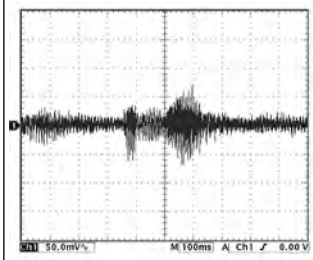

44 **IC4804-pin 32**
V: 50mV/div. H: 100msec/div.

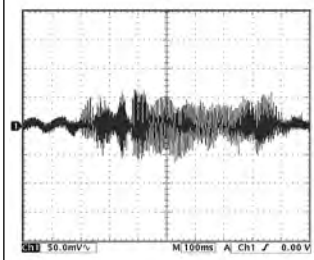

45 **IC4807-pin 1**
V: 50mV/div. H: 100msec/div.

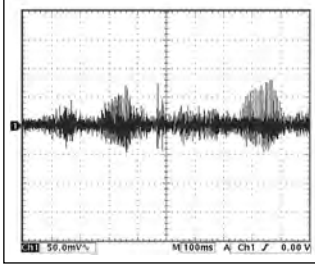

46 **IC4807-pin 7**
V: 50mV/div. H: 100msec/div.

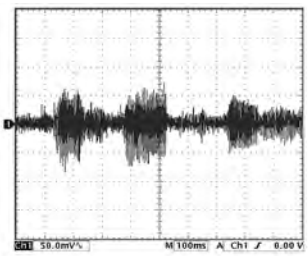

47 **IC4804-pin 13**
V: 200mV/div. H: 100msec/div.

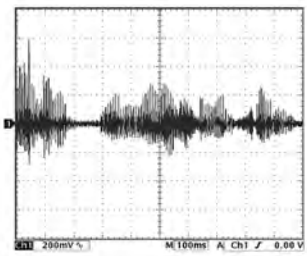

48 **IC4804-pin 14**
V: 200mV/div. H: 100msec/div.

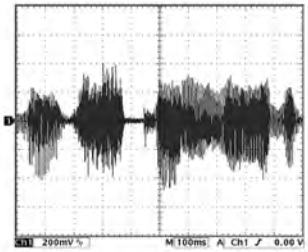

49 **IC4401-pin 2**
V: 500mV/div. H: 40msec/div.

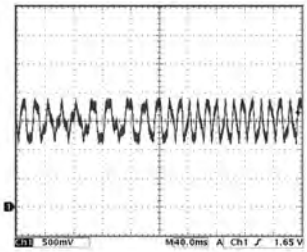

50 **IC4401-pin 30**
V: 500mV/div. H: 400µsec/div.

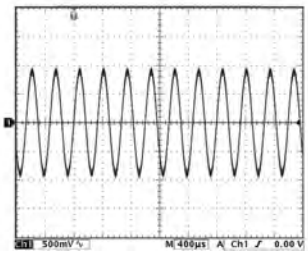

51 **IC4401-pin 31**
V: 500mV/div. H: 400µsec/div.

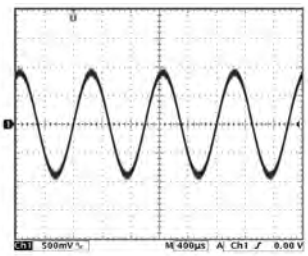

52 **IC4804-pin 19**
V: 500mV/div. H: 400µsec/div.

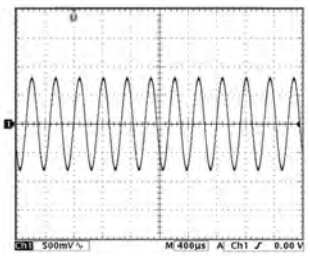

53 **IC4804-pin 20**
V: 500mV/div. H: 400µsec/div.

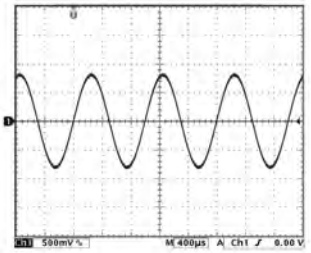

54 **IC4804-pin 13**
V: 500mV/div. H: 400µsec/div.

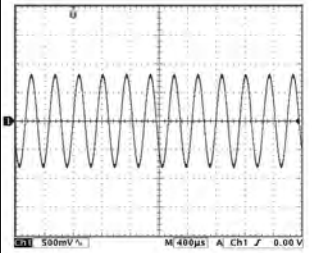

55 **IC4804-pin 14**
V: 500mV/div. H: 400µsec/div.

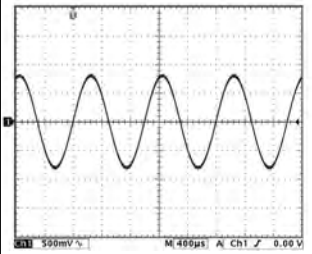

56 **IC6405-pin 7**
V: 500mV/div. H: 40msec/div.

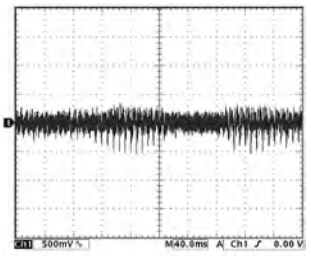

57 **IC6405-pin 8**
V: 500mV/div. H: 40msec/div.

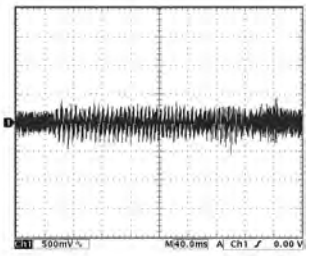

58 **TP7410**
V: 20mV/div. H: 400µsec/div.

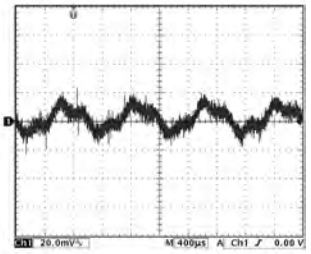

7.1.2 DISASSEMBLY

Note : Even if the unit shown in the photos and illustrations in this manual may differ from your product, the procedures described here are common.

For PDP-R06XE Model

1 Metal Bonnet

① Remove the three screws.

● **Rear view**

② Remove the four screws.

③ Remove the metal bonnet while pulling it backward.

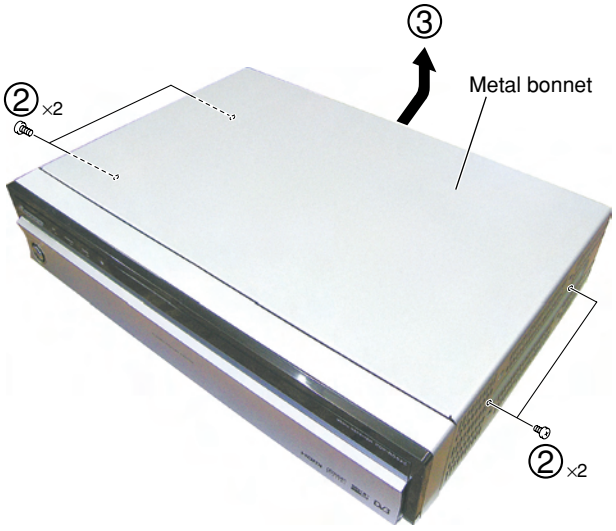

2 Front Panel Section

① Disconnect the flexible cable.

② Remove the flexible cable from the flat clamp.

③ Unhook the six hooks.

④ Remove the front panel section.

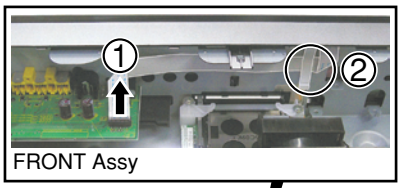

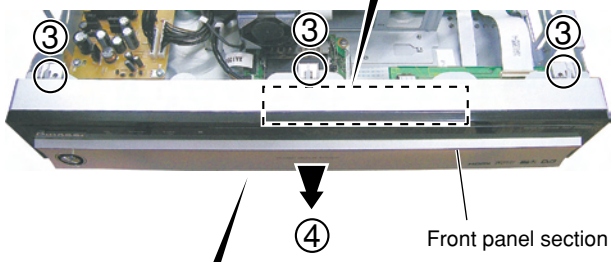

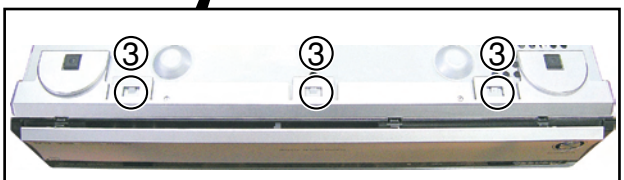

● **Bottom view**

3 R06 D-TUNER Assy

Note : R06 D-TUNER Assy can remove even if does not remove the front panel section.

① Remove the two screws.

② Disconnect the two connectors.

③ Disconnect the two flexible cables.

④ Remove the two screws.

⑤ Remove the R06 D-TUNER Assy.

• **Rear view**

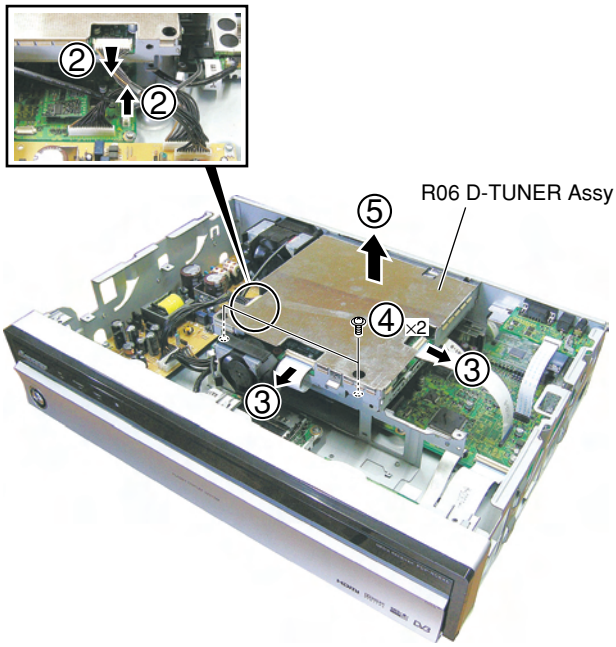

PCB Location

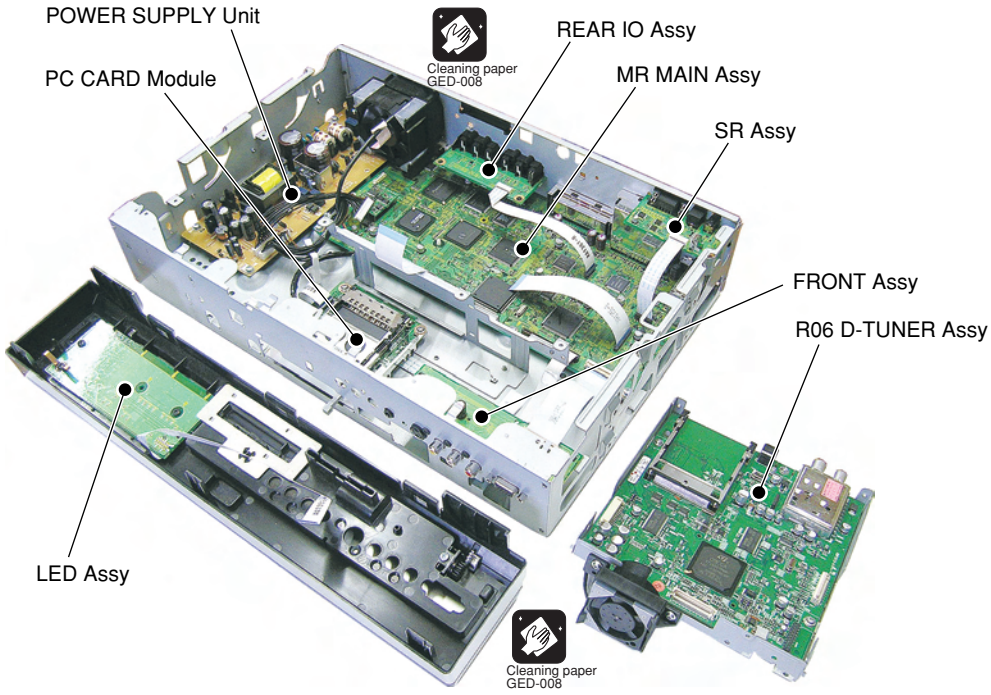

7.2 EXPLANATION
7.2.1 PROCESSING IN ABNORMALITY

Power supply and DC-DC converter

● **Circuit diagram**

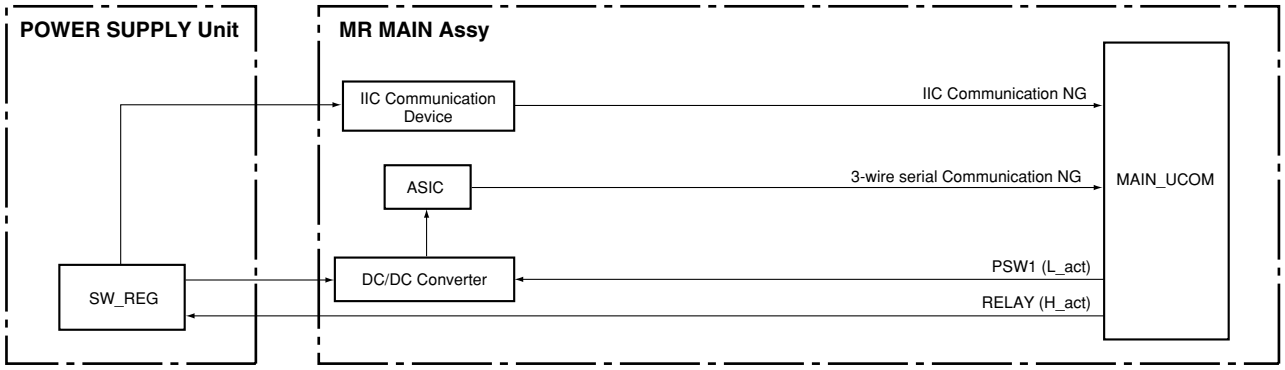

Fan and temperature sensor

● **Circuit diagram**

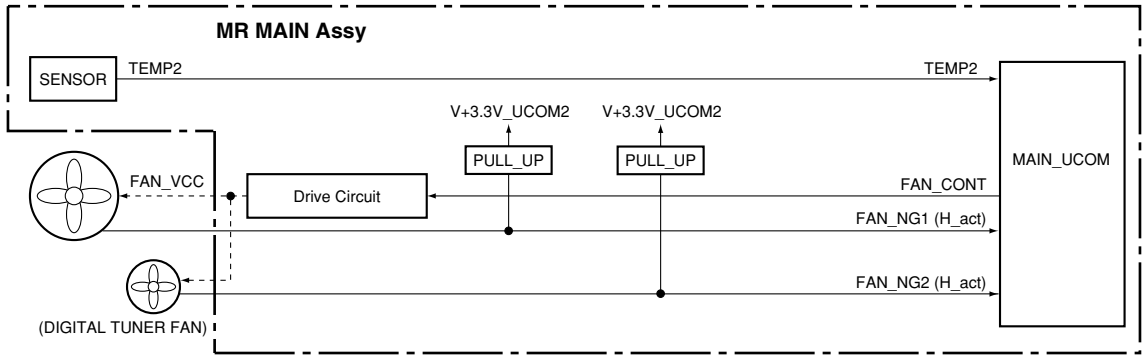

● **Specifications for port monitoring**

Port Name	SD/PD Indication	Assigned Pin	Active
FAN_NG 1	FAN	155	Shutdown with H
FAN_NG 2	FAN	104	Shutdown with H
TEMP2	Abnormally high temperature in the MR	76	Shutdown when the value exceeds the predetermined value

Power supply for DTB Antenna

● **Circuit diagram**

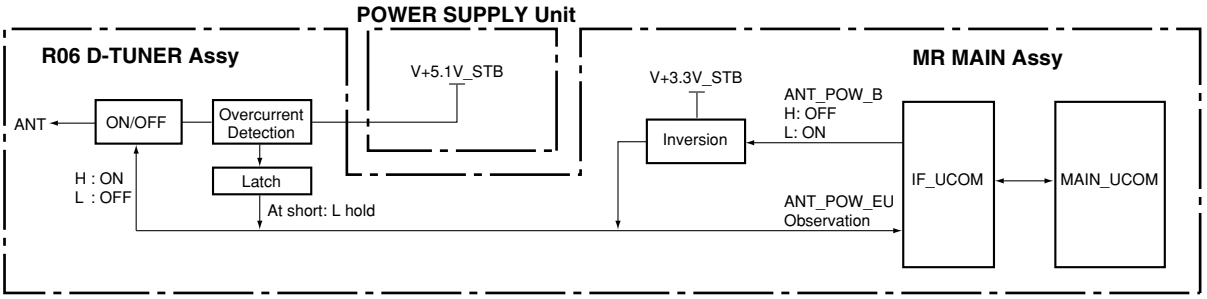

● **Specifications for port monitoring**

Port Name	SD/PD Indication	Assigned Pin	Active
ANT_POW_EU	DTB antenna short-circuit	IF_37	Warning with L

■ LED-lighting patterns

Status of the Unit		LED-lighting Pattern
Standby, power management	Lit in red	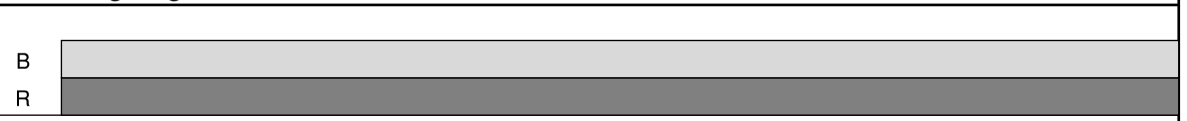
Power on	Lit in blue	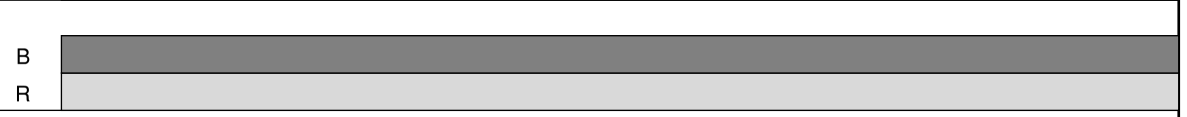
PDP's power not on	Flashing in red (at 1-sec intervals)	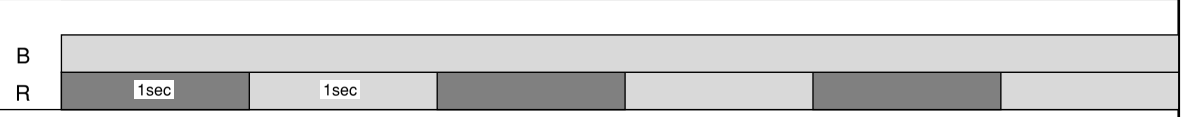
System cable disconnected *	Flashing alternately in red and blue (at 1-sec intervals)	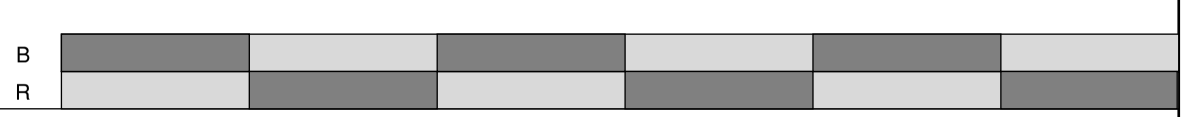
Waiting for start of rewriting by the microcomputer		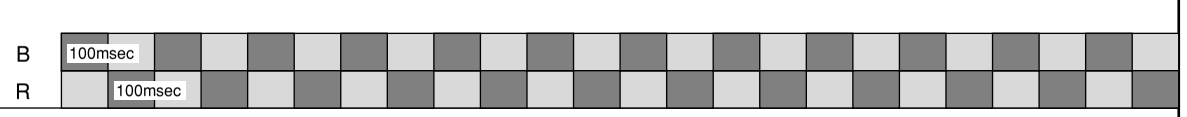
Waiting for finish of rewriting by the microcomputer		
Shutdown (circuit protection)	Flashing in blue n times (initially at 0.5-sec intervals then 2.5-sec intervals)	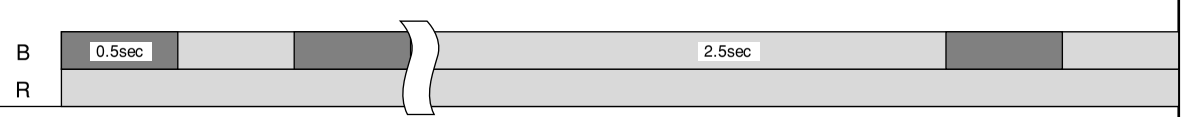
Power-down (circuit protection)	Flashing in red for n times (initially at 0.5-sec intervals then 2.5-sec intervals)	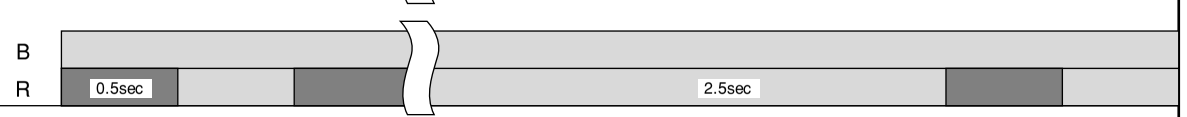
TRAP switch operation		

* In this case, the red and green areas on the screen of the panel flash alternately.

■ Defective points assumed from the number of times of LED flashing

No. of times of LED flashing				Category ∗1	Site detected as defective	Possible defective points (representative examples)	OSD when detected (warning message)
LEDs on the panel		LEDs on the MR					
RED	Blue	RED	Blue				
	Blue 1	Red		SD	Panel drive IC	∗2	None
	Blue 2	Red			Module section IIC	∗2	None
	Blue 3	Red			Power decrease of DIGITAL-DC-DC	∗2	None
	Blue 4	Red			Panel having abnormally high temperature	∗2	Powering off. Intemal temperatures is too high. Chheck temperatures around PDP. (SD04) ∗6
	Blue 5	Red			Short-circuiting of the speakers	∗2	Internal protection circuit turns off. Is there a short in speaker cable? (SD05).
Red			Blue 6		Module microcomputer	Disconnection of the system cable Defective module microcomputer or its peripheral circuits of the panel (Refer to the service manual of the PDP-436PE or PDP-506PE.) Defective main microcomputer (IC5206) Failure in communication (TXD_MD, RXD_MD, REQ_MD) between the panel's module microcomputer and IC5206 (main microcomputer)	None
Red			Blue 7		3-wire serial connection of the main section	Defective IC5002 or its peripheral circuits Failure in communication (TXD_IF, RXD_IF, CLK_IF, CE_IF, BUSY_IF) between IC5002 and IC5207 (main microcomputer) Defective IC7001 or its peripheral circuits Failure in communication (TXD_IC3, RXD_IC3, CLK_IC3, CE_IC3, REQ_IC3, BUSY_IC3) between IC7001 and IC5206 (main microcomputer)	None
Red			Blue 8		IIC of the main section	Defective U4401 (FE1) or its peripheral circuits Defective Uxxxx (FE2) or its peripheral circuits ∗3 Defective IC4401 (MPX) or its peripheral circuits Defective IC4804 (AV_SW) or its peripheral circuits Defective IC4806 (RGB_SW) or its peripheral circuits Defective ICxxxx (CCD) or its peripheral circuits ∗3 Defective ICxxxx (GCR) or its peripheral circuits ∗4 Defective IC6003 (M-VDEC) or its peripheral circuits Defective IC6001 (S-VDEC) or its peripheral circuits Defective IC6201 (ADC) or its peripheral circuits Defective IC6404 (HDMI) or its peripheral circuits Defective IC7202 (PLK-T) or its peripheral circuits Defective ICxxxx (PLK-R) or its peripheral circuits Defective IC5405 (TTX-COM, TTX-BSY) or its peripheral circuits Defective IC5202 (MA-EEP) or its peripheral circuits Failure in communication (SCL_AV, SDA_AV, SCL_MA, SDA_MA, SCL_EP, SDA_EP, SCL_TTX, SDA_TTX, SCL_HDCP, SDA_HDCP) between one of the above devices and IC5206 (main microcomputer)	None
Red			Blue 9		Main microcomputer	Defective IC5206 (main microcomputer) Defective flexible cable for communication between the MR MAIN BOARD Assy and the AV BOARD Assy Failure in communication (TXD_IF, RXD_IF, CLK_IF, CE_IF, REQ_IF, BUSY_IF) between IC5206 (main microcomputer) and IC5002	None
Red			Blue 10		Fan	Failure in the fan motor, or the fan stopped because of dust attached to the fan	None
Red			Blue 11		MR or unit having abnormally high temperature	The Media Receiver or the unit being used at high temperature	Powering off. Internal temperature is too high. Check temperature around media receiver. (SD11)
Red			Blue 12		Digital tuner	Defective DTV tuner ∗5	None
Red			Blue 13		ASIC power supply (DC-DC)	Defective U4201 (DD_CON) or short-circuiting elsewhere ∗6	None
Red 2		Red		PD	POWER	∗2	None
Red 3		Red			SCAN	∗2	None
Red 4		Red			SCN-5V	∗2	None
Red 5		Red			Y-DRV	∗2	None
Red 6		Red			Y-DCDC	∗2	None
Red 7		Red			Y-SUS	∗2	None
Red 8		Red			ADRS	∗2	None
Red 9		Red			X-DRV	∗2	None
Red 10		Red			X-DCDC	∗2	None
Red 11		Red			X-SUS	∗2	None
Red 12		Red			D-DCDC	∗2	None
Red 13		Red			IC4	∗2	None
Red 15		Red			UNKNOWN	∗2	None

∗1: Shutdown (SD) is a protective operation controlled by the microcomputer, and you can turn on the unit again using the remote control unit. Power-down (PD) is a protective operation activated by the circuitry and can be reset after AC power is off for about 1 minute.
∗2: Refer to the service manual of the PDP-436PE or PDP-506PE.
∗3: Only for US model.
∗4: Only for J model.
∗5: Only for US and J model.
∗6: Only for one-body model.

7.2.2 POWER ON SEQUENCE

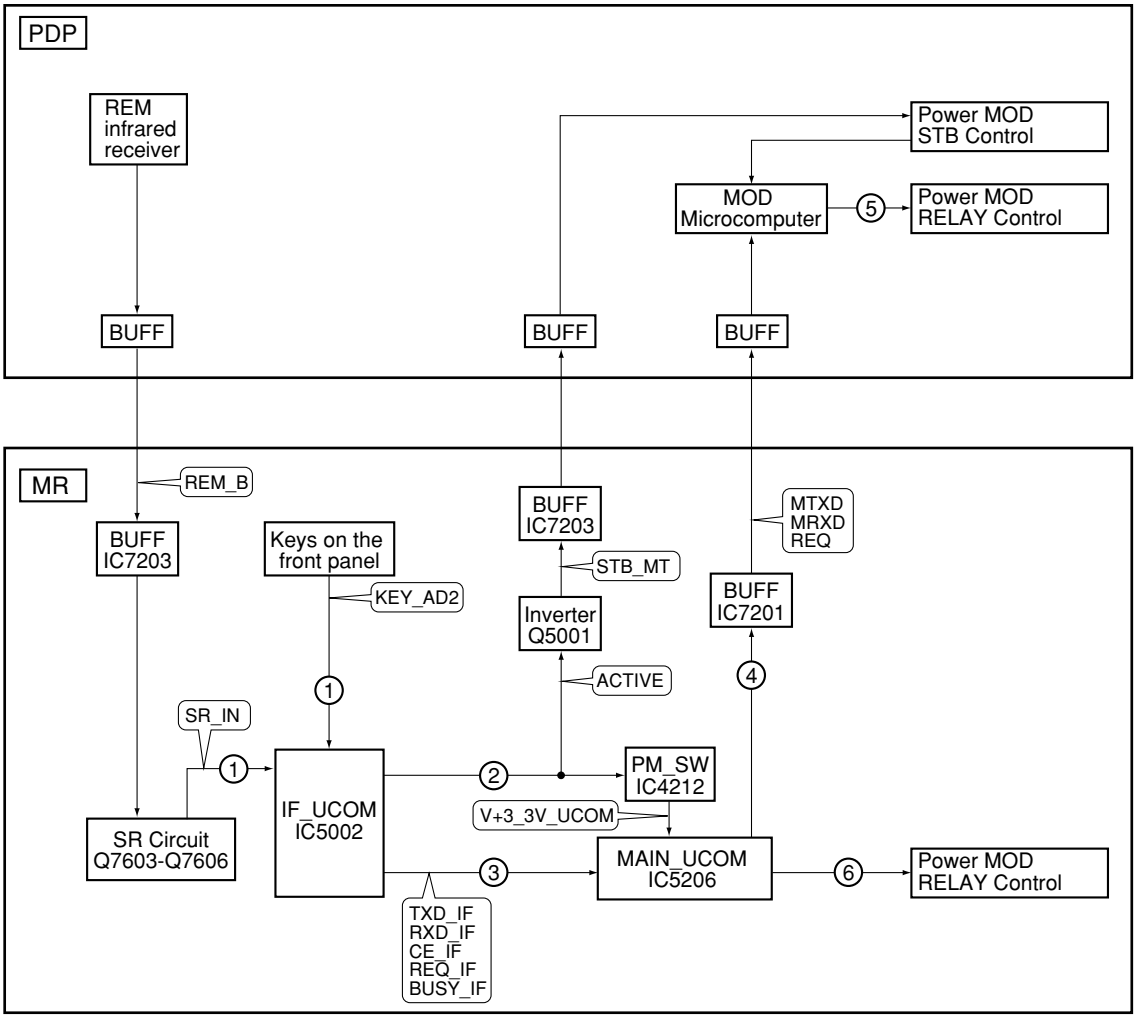

REM_B Descriptions in a call-out are signal names for reference.
For wiring numbers on the PDP side, refer to the service manual for the PDP.

① : The signal from the remote control unit (or a key signal) is input to the IF microcomputer.
② : The IF microcomputer supplies the power to the main microcomputer and MOD microcomputer.
③ : The IF microcomputer transmits operation data from the remote control unit (or keys) to the main microcomputer.
④ : The main microcomputer issues a startup command to the MOD microcomputer.
⑤ : The MOD microcomputer controls the relay of the PDP Power MOD and starts the power-on sequence of the PDP.
⑥ : The main microcomputer controls the relay of the MR Power MOD and starts the power-on sequence of the MR.

7.3 PARTS
7.3.1 IC

• The information shown in the list is basic information and may not correspond exactly to that shown in the schematic diagrams.

● **List of IC**

R2S11002AFT, R2S11001FT, K4S641632H-TC75, S29AL016D70TFI010, UPD64015AGM-UEU, TVP5150AM1PBS, K4S161622H-TC60, AD9985KSTZ-110, SII9021CTU, K4S643232H-TC60, S29JL032H70TFI21, SII170BCLG64, AXF1149, AXY1117

■ R2S11002AFT (MR MAIN ASSY: IC4804)

• AV SW

● **Block Diagram**

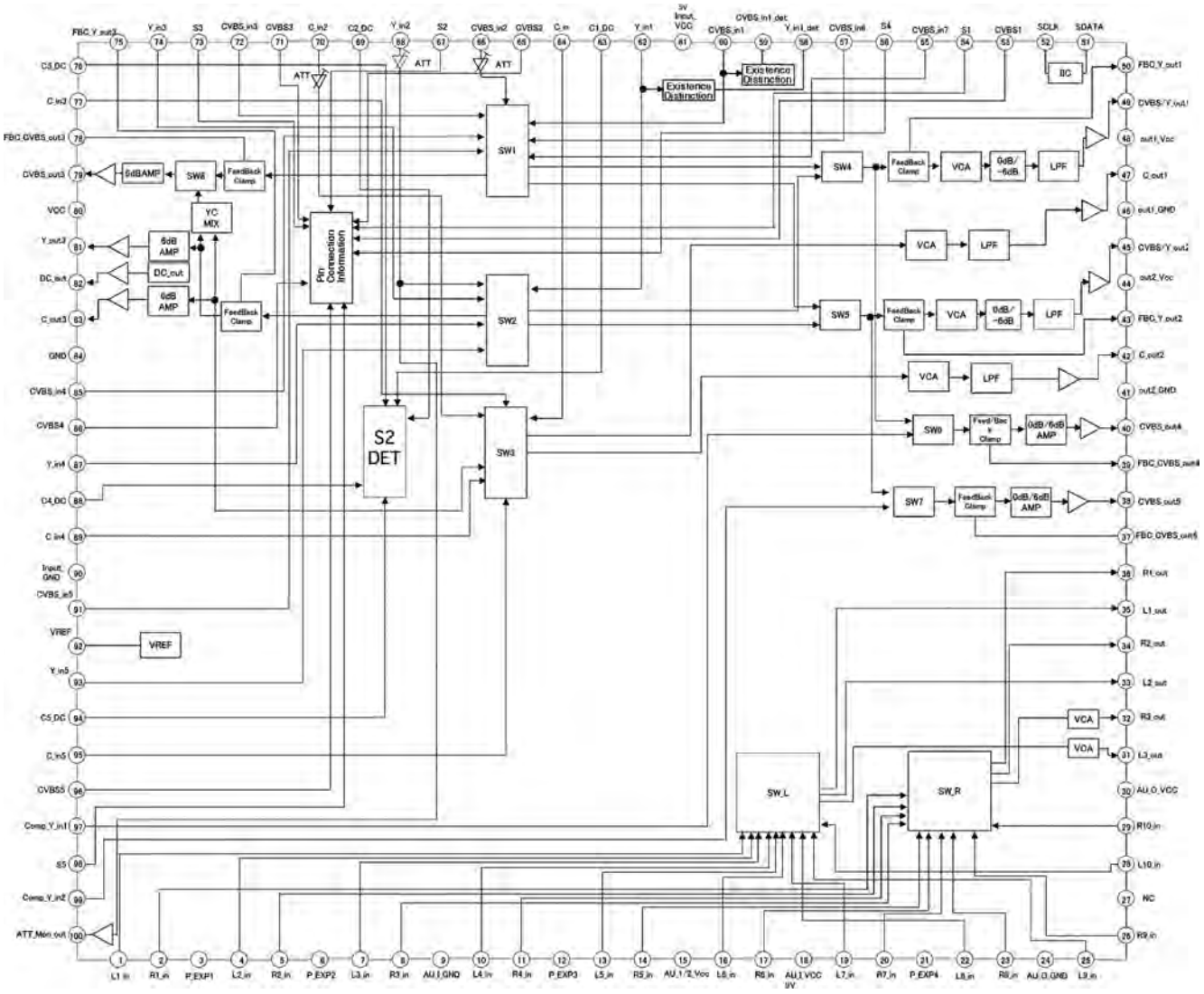

■ R2S11001FT (MR MAIN ASSY: IC4806)

• Component SW IC

● Block Diagram

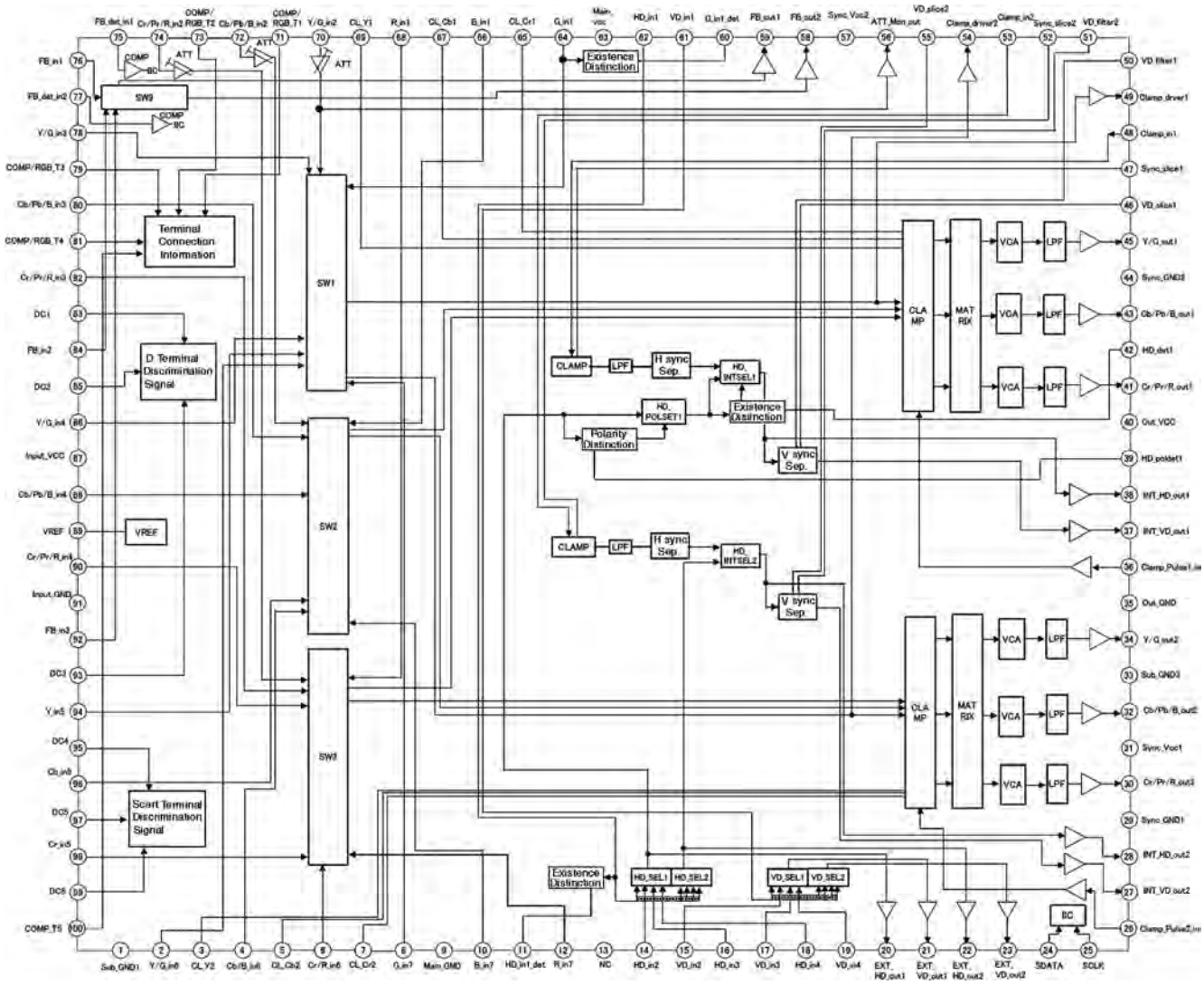

■ K4S641632H-TC75 (MR MAIN ASSY : IC5403)

• 64M SDRAM

● Pin Arrangement (Top view)

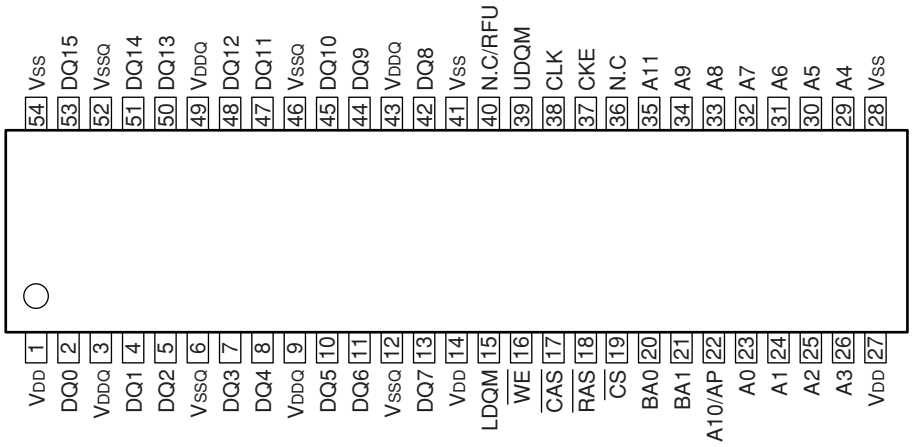

● Block Diagram

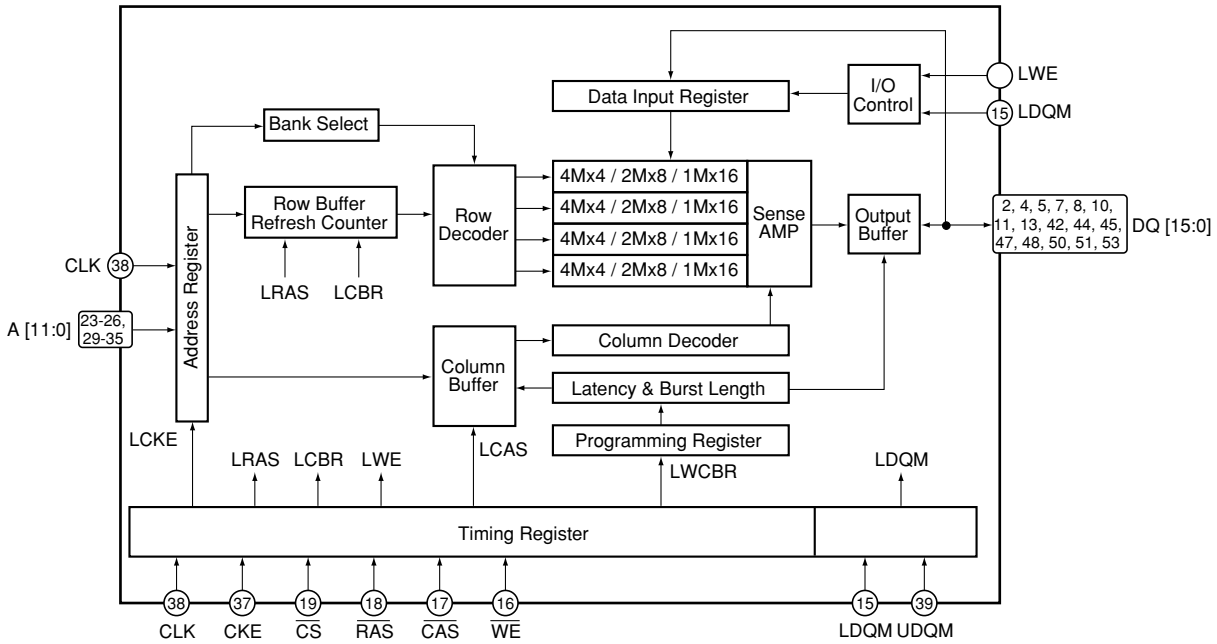

● **Pin Function**

No.	Pin Name	I/O	Pin Function	No.	Pin Name	I/O	Pin Function
1	V_{DD}	–	Power supply	28	V_{SS}	–	Ground
2	DQ0	I/O	Data input/output	29	A4	I	Address input
3	V_{DDQ}	–	Power supply for data output	30	A5	I	Address input
4	DQ1	I/O	Data input/output	31	A6	I	Address input
5	DQ2	I/O	Data input/output	32	A7	I	Address input
6	V_{SSQ}	–	Ground for data output	33	A8	I	Address input
7	DQ3	I/O	Data input/output	34	A9	I	Address input
8	DQ4	I/O	Data input/output	35	A11	I	Address input
9	V_{DDQ}	–	Power supply for data output	36	N.C	–	No connection
10	DQ5	I/O	Data input/output	37	CKE	I	Clock enable input
11	DQ6	I/O	Data input/output	38	CLK	I	System clock input
12	V_{SSQ}	–	Ground for data output	39	UDQM	I	Data input/output mask
13	DQ7	I/O	Data input/output	40	N.C/RFU	–	No connection (Reserved for future use)
14	V_{DD}	–	Power supply	41	V_{SS}	–	Ground
15	LDQM	I	Data input/output mask	42	DQ8	I/O	Data input/output
16	$\overline{WE}$	I	Write enable input	43	V_{DDQ}	–	Power supply for data output
17	$\overline{CAS}$	I	Column address strobe input	44	DQ9	I/O	Data input/output
18	$\overline{RAS}$	I	Row address strobe input	45	DQ10	I/O	Data input/output
19	$\overline{CS}$	I	Chip select input	46	V_{SSQ}	–	Ground for data output
20	BA0	I	Bank select address input	47	DQ11	I/O	Data input/output
21	BA1	I	Bank select address input	48	DQ12	I/O	Data input/output
22	A10/AP	I	Address input	49	V_{DDQ}	–	Power supply for data output
23	A0	I	Address input	50	DQ13	I/O	Data input/output
24	A1	I	Address input	51	DQ14	I/O	Data input/output
25	A2	I	Address input	52	V_{SSQ}	–	Ground for data output
26	A3	I	Address input	53	DQ15	I/O	Data input/output
27	V_{DD}	–	Power supply	54	V_{SS}	–	Ground

■ S29AL016D70TFI010 (MR MAIN ASSY : IC5404)

• 16M Flash Memory

● Pin Arrangement (Top view)

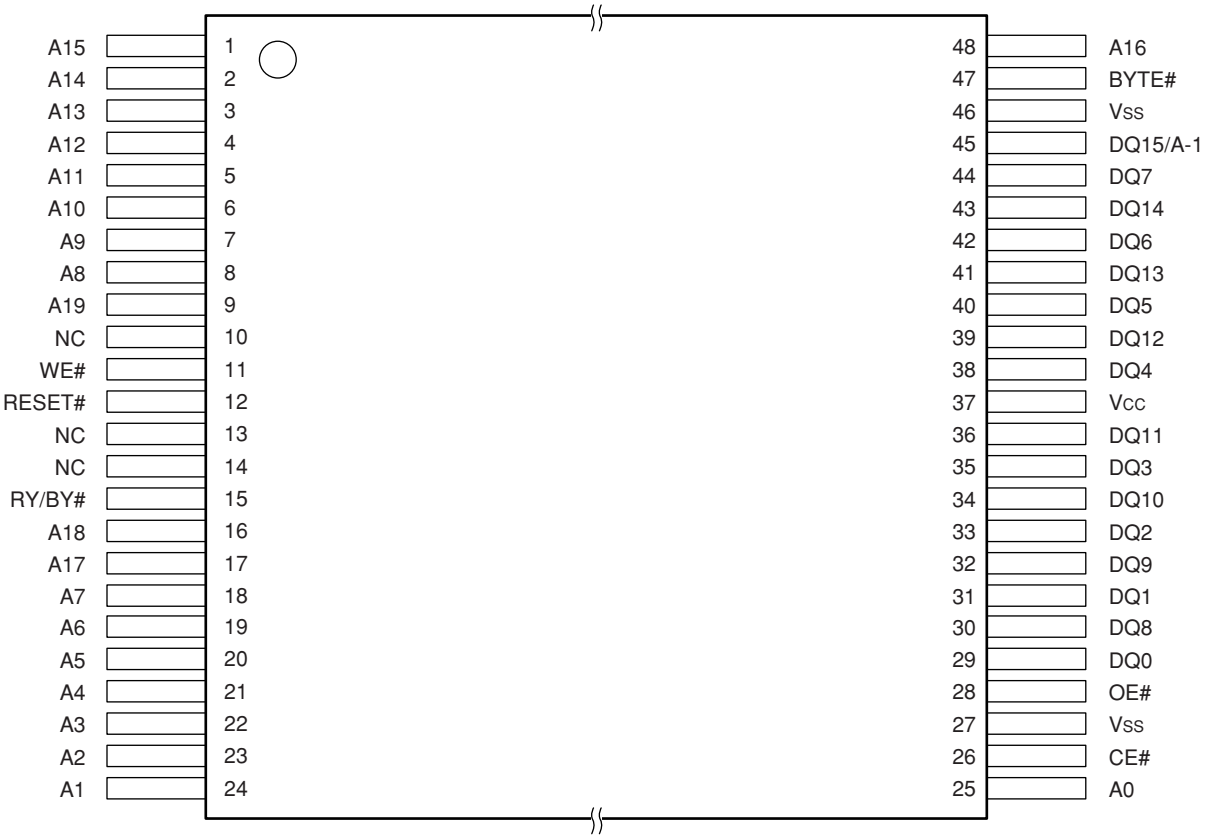

● Block Diagram

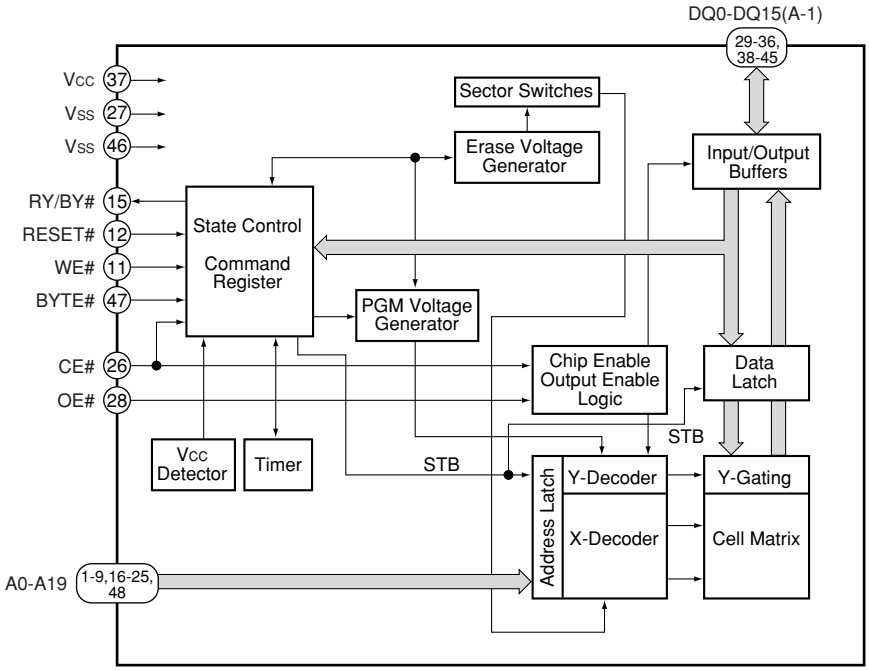

● **Pin Function**

No.	Pin Name	I/O	Pin Function	No.	Pin Name	I/O	Pin Function
1	A15	I	Address input	25	A0	I	Address input
2	A14	I	Address input	26	CE#	I	Chip enable
3	A13	I	Address input	27	Vss	–	Device ground
4	A12	I	Address input	28	OE#	I	Output enable
5	A11	I	Address input	29	DQ0	I/O	Data input/output
6	A10	I	Address input	30	DQ8	I/O	Data input/output
7	A9	I	Address input	31	DQ1	I/O	Data input/output
8	A8	I	Address input	32	DQ9	I/O	Data input/output
9	A19	I	Address input	33	DQ2	I/O	Data input/output
10	NC	–	No connection	34	DQ10	I/O	Data input/output
11	WE#	I	Write enable	35	DQ3	I/O	Data input/output
12	RESET#	I	Hardware reset	36	DQ11	I/O	Data input/output
13	NC	–	No connection	37	Vcc	–	3V single power supply
14	NC	–	No connection	38	DQ4	I/O	Data input/output
15	RY/BY#	O	Ready/Busy output	39	DQ12	I/O	Data input/output
16	A18	I	Address input	40	DQ5	I/O	Data input/output
17	A17	I	Address input	41	DQ13	I/O	Data input/output
18	A7	I	Address input	42	DQ6	I/O	Data input/output
19	A6	I	Address input	43	DQ14	I/O	Data input/output
20	A5	I	Address input	44	DQ7	I/O	Data input/output
21	A4	I	Address input	45	DQ15/A-1	I/O	DQ15: Data input/output, word mode A-1: LSB address input, byte mode
22	A3	I	Address input	46	Vss	–	Device ground
23	A2	I	Address input	47	BYTE#	I	Selects 8-bit or 16-bit mode
24	A1	I	Address input	48	A16	I	Address input

■ UPD64015AGM-UEU (MR MAIN ASSY : IC6003)

• Video Decoder (for main screen)

● Pin Arrangement (Top view)

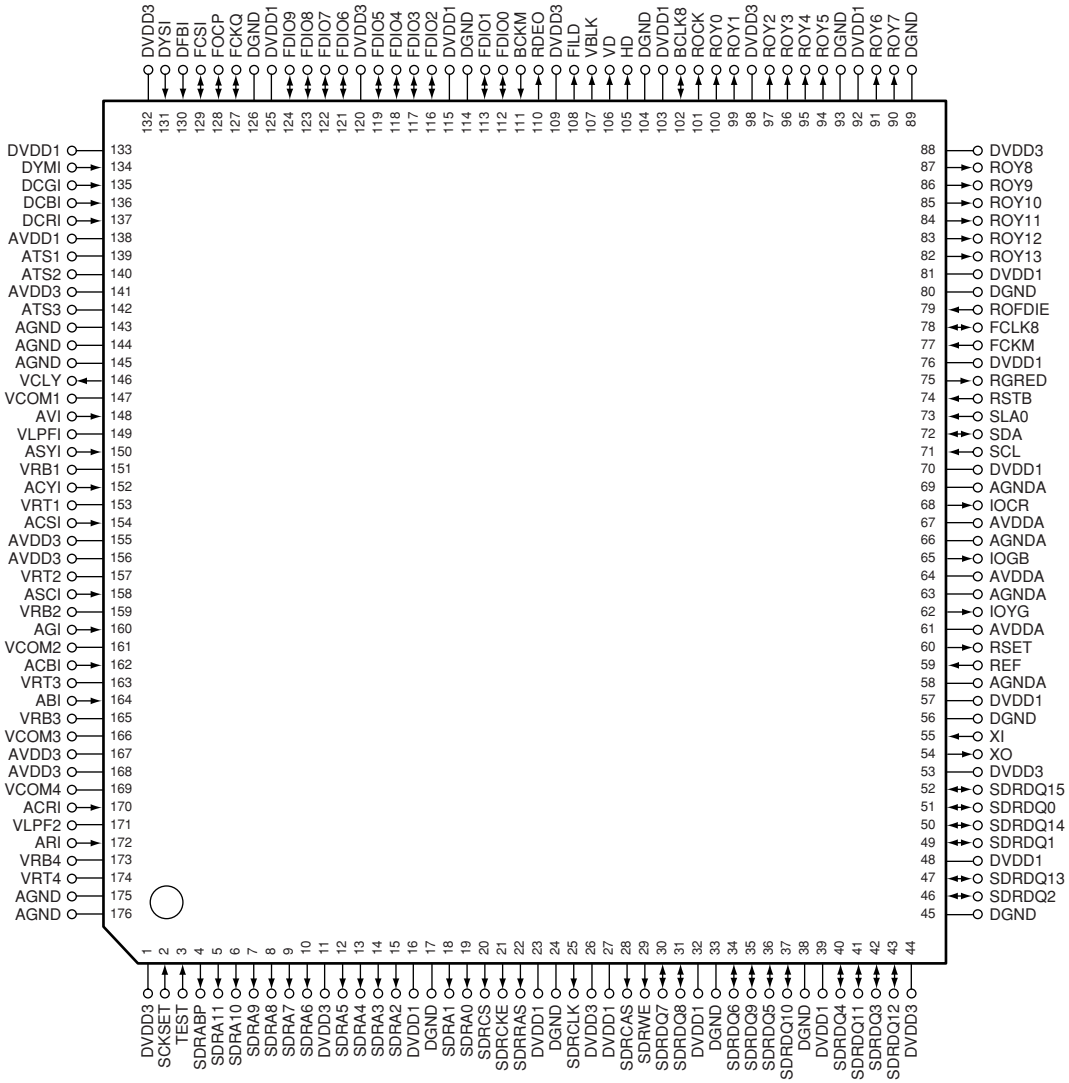

● Block Diagram

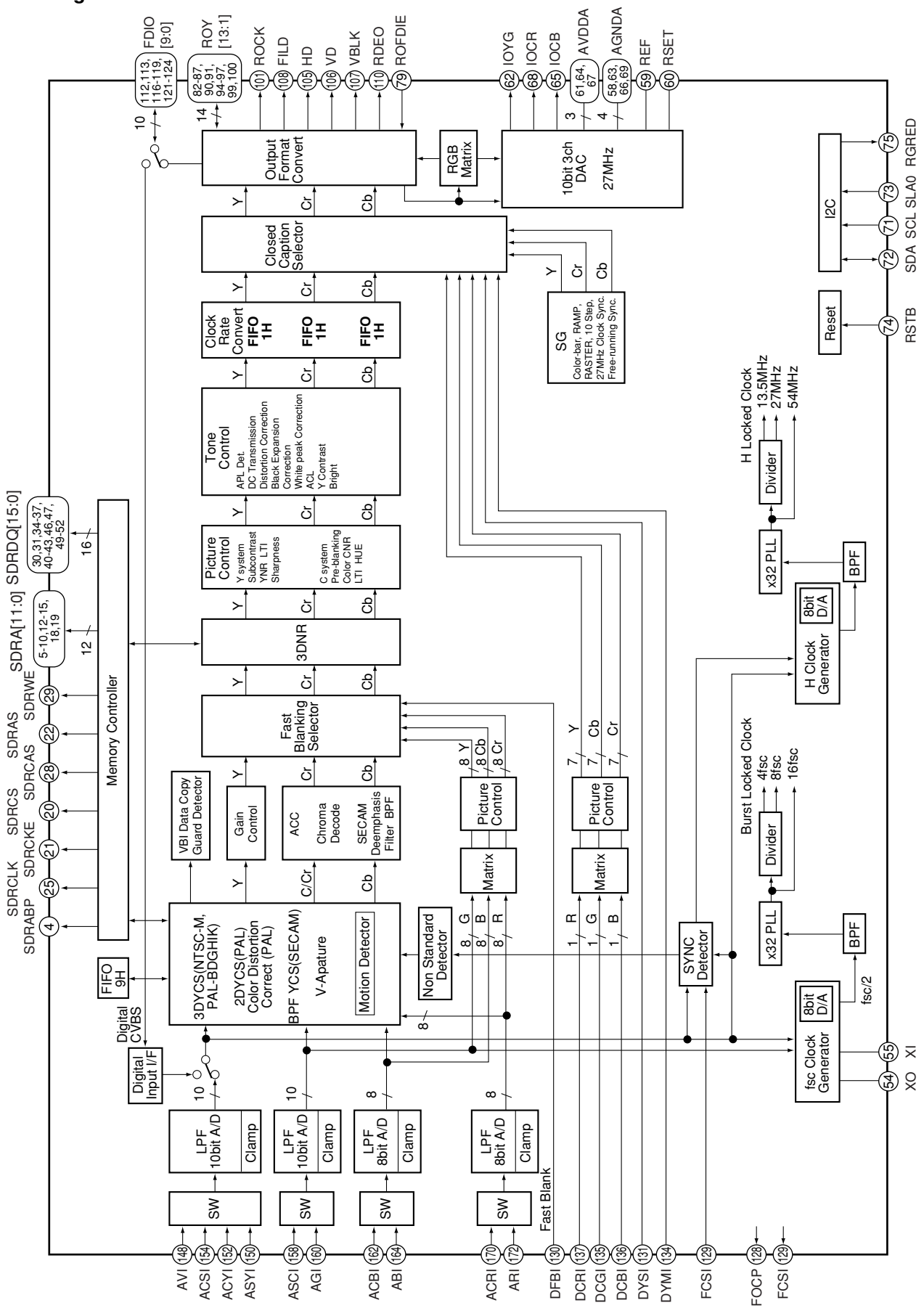

● Pin Function

No.	Pin Name	I/O	Pin Function
1	DVDD3	–	Digital power supply (3.3V)
2	SCKSET	I	Test mode selection (L: Normal, H: Test mode)
3	TEST	I	Test setting (L: Normal, H: Test mode)
4	SDRABP	O	All bank precharge output for external memory (Active High)
5	SDRA11	O	Address output for external memory
6	SDRA10	O	Address output for external memory
7	SDRA9	O	Address output for external memory
8	SDRA8	O	Address output for external memory
9	SDRA7	O	Address output for external memory
10	SDRA6	O	Address output for external memory
11	DVDD3	–	Digital power supply (3.3V)
12	SDRA5	O	Address output for external memory
13	SDRA4	O	Address output for external memory
14	SDRA3	O	Address output for external memory
15	SDRA2	O	Address output for external memory
16	DVDD1	–	Digital power supply (1.5V)
17	DGND	–	Digital ground
18	SDRA1	O	Address output for external memory
19	SDRA0	O	Address output for external memory
20	SDRCS	O	Chip select output for external memory (Active Low)
21	SDRCKE	O	Clock enable output for external memory (Active High)
22	SDRRAS	O	Row address strobe output for external memory (Active Low)
23	DVDD1	–	Digital power supply (1.5V)
24	DGND	–	Digital ground
25	SDRCLK	O	Clock output for external memory
26	DVDD3	–	Digital power supply (3.3V)
27	DVDD1	–	Digital power supply (1.5V)
28	SDRCAS	O	Column address strobe output for external memory (Active Low)
29	SDRWE	O	Write enable output for external memory (Active Low)
30	SDRDQ7	I/O	Data input/output for external memory
31	SDRDQ8	I/O	Data input/output for external memory
32	DVDD1	–	Digital power supply (1.5V)
33	DGND	–	Digital ground
34	SDRDQ6	I/O	Data input/output for external memory
35	SDRDQ9	I/O	Data input/output for external memory
36	SDRDQ5	I/O	Data input/output for external memory
37	SDRDQ10	I/O	Data input/output for external memory
38	DGND	–	Digital ground
39	DVDD1	–	Digital power supply (1.5V)
40	SDRDQ4	I/O	Data input/output for external memory
41	SDRDQ11	I/O	Data input/output for external memory
42	SDRDQ3	I/O	Data input/output for external memory
43	SDRDQ12	I/O	Data input/output for external memory
44	DVDD3	–	Digital power supply (3.3V)
45	DGND	–	Digital ground
46	SDRDQ2	I/O	Data input/output for external memory
47	SDRDQ13	I/O	Data input/output for external memory
48	DVDD1	–	Digital power supply (1.5V)
49	SDRDQ1	I/O	Data input/output for external memory
50	SDRDQ14	I/O	Data input/output for external memory

No.	Pin Name	I/O	Pin Function
51	SDRDQ0	I/O	Data input/output for external memory
52	SDRDQ15	I/O	Data input/output for external memory
53	DVDD3	–	Digital power supply (3.3V)
54	XO	O	Reference clock output Connect a 24.576MHz crystal.
55	XI	I	Reference clock input Connect a 24.576MHz crystal.
56	DGND	–	Digital ground
57	DVDD1	–	Digital power supply (1.5V)
58	AGNDA	–	Analog ground for DAC
59	REF	I	External reference input
60	RSET	O	Connect a 620 ohm resistor for external adjustment to AGND
61	AVDDA	–	Analog power supply for DAC (3.3V)
62	IOYG	O	Color-difference component Y / RGB component G output signal
63	AGNDA	–	Analog ground for DAC
64	AVDDA	–	Analog power supply for DAC (3.3V)
65	IOGB	O	Color-difference component Cb / RGB component B output signal
66	AGNDA	–	Analog ground for DAC
67	AVDDA	–	Analog power supply for DAC (3.3V)
68	IOCR	O	Color-difference component Cr / RGB component R output signal
69	AGNDA	–	Analog ground for DAC
70	DVDD1	–	Digital power supply (1.5V)
71	SCL	I	I^2C bus clock input Connect to SCL line of the system.
72	SDA	I/O	I^2C bus data input/output Connect to SDA line of the system.
73	SLA0	I	I^2C bus slave address select input (L: B8h/B9h, H: BAh/BBh)
74	RSTB	I	System reset input (Active Low)
75	RGRED	O	I^2C register read flag output (Active Low)
76	DVDD1	–	Digital power supply (1.5V)
77	FCKM	I	FCLK8 test mode selection (L: Normal, H: Test mode)
78	FCLK8	I/O	Line-lock clock monitor input/output
79	ROFDIE	I	Output enable of the video input/output terminal L: Output terminal Hi-Z, H: Output enable
80	DGND	–	Digital ground
81	DVDD1	–	Digital power supply (1.5V)
82	ROY13	O	Digital ITU-R BT. 656/component output Digital RGB component (8 bit) output
83	ROY12	O	Digital ITU-R BT. 656/component output Digital RGB component (8 bit) output
84	ROY11	O	Digital ITU-R BT. 656/component output Digital RGB component (8 bit) output
85	ROY10	O	Digital ITU-R BT. 656/component output Digital RGB component (8 bit) output
86	ROY9	O	Digital ITU-R BT. 656/component output Digital RGB component (8 bit) output
87	ROY8	O	Digital ITU-R BT. 656/component output Digital RGB component (8 bit) output
88	DVDD3	–	Digital power supply (3.3V)
89	DGND	–	Digital ground
90	ROY7	O	Digital ITU-R BT. 656/component output Digital RGB component (8 bit) output
91	ROY6	O	Digital ITU-R BT. 656/component output Digital RGB component (8 bit) output
92	DVDD1	–	Digital power supply (1.5V)
93	DGND	–	Digital ground
94	ROY5	O	Digital ITU-R BT. 656/component output Digital RGB component (8 bit) output
95	ROY4	O	Digital ITU-R BT. 656/component output Digital RGB component (8 bit) output
96	ROY3	O	Digital ITU-R BT. 656/component output Digital RGB component (8 bit) output
97	ROY2	O	Digital ITU-R BT. 656/component output Digital RGB component (8 bit) output
98	DVDD3	–	Digital power supply (3.3V)
99	ROY1	O	Digital ITU-R BT. 656/component output Digital RGB component (8 bit) output
100	ROY0	O	Digital ITU-R BT. 656/component output Digital RGB component (8 bit) output

No.	Pin Name	I/O	Pin Function
101	ROCK	O	Clock for digital ITU-R BT. 656/component output
102	BCLK8	I/O	Line-lock clock monitor input/output
103	DVDD1	–	Digital power supply (1.5V)
104	DGND	–	Digital ground
105	HD	O	Horizontal sync. signal output
106	VD	O	Vertical sync. signal output
107	VBLK	O	V blanking output
108	FILD	O	Field output
109	DVDD3	–	Digital power supply (3.3V)
110	RDEO	O	Effective pixel area output
111	BCKM	I	Test mode selection of BCLK8 pin (L: Normal, H: Test mode)
112	FDIO0	I/O	Digital 8/10 bit Cb, Cr output / Input at UPD64031A digital connection Open at no use.
113	FDIO1	I/O	Digital 8/10 bit Cb, Cr output / Input at UPD64031A digital connection Open at no use.
114	DGND	–	Digital ground
115	DVDD1	–	Digital power supply (1.5V)
116	FDIO2	I/O	Digital 8/10 bit Cb, Cr output / Input at UPD64031A digital connection Open at no use.
117	FDIO3	I/O	Digital 8/10 bit Cb, Cr output / Input at UPD64031A digital connection Open at no use.
118	FDIO4	I/O	Digital 8/10 bit Cb, Cr output / Input at UPD64031A digital connection Open at no use.
119	FDIO5	I/O	Digital 8/10 bit Cb, Cr output / Input at UPD64031A digital connection Open at no use.
120	DVDD3	–	Digital power supply (3.3V)
121	FDIO6	I/O	Digital 8/10 bit Cb, Cr output / Input at UPD64031A digital connection Open at no use.
122	FDIO7	I/O	Digital 8/10 bit Cb, Cr output / Input at UPD64031A digital connection Open at no use.
123	FDIO8	I/O	Digital 8/10 bit Cb, Cr output / Input at UPD64031A digital connection Open at no use.
124	FDIO9	I/O	Digital 8/10 bit Cb, Cr output / Input at UPD64031A digital connection Open at no use.
125	DVDD1	–	Digital power supply (1.5V)
126	DGND	–	Digital ground
127	FCKQ	I/O	Sampling clock output for digital connection
128	FOCP	I/O	Clamp pulse output for digital connection / Timing output for digital RGB input (VD)
129	FCSI	I/O	Sync sep. signal input / Timing output for RGB input (HD)
130	DFBI	I	Fast blanking signal input for analog RGB input
131	DYSI	I	YS signal input for digital RGB input
132	DVDD3	–	Digital power supply (3.3V)
133	DVDD1	–	Digital power supply (1.5V)
134	DYMI	I	YM signal input for digital RGB input
135	DCGI	I	Digital RGB/G signal input
136	DCBI	I	Digital RGB/B signal input
137	DCRI	I	Digital RGB/R signal input
138	AVDD1	–	Analog power supply (1.5V)
139	ATS1	–	Analog test input Normally, connect to GND.
140	ATS2	–	Analog test input Normally, connect to GND.
141	AVDD3	–	Analog power supply (3.3V)
142	ATS3	–	Analog test input Normally, connect to GND.
143	AGND	–	Analog ground
144	AGND	–	Analog ground
145	AGND	–	Analog ground
146	VCLY	O	ADC1 clamp voltage
147	VCOM1	–	ADC1 common-mode reference voltage
148	AVI	I	ADC1 composite/Y signal input
149	VLPFI	–	Analog test output Connect to GND via 0.1μF capacitor.
150	ASYI	I	ADC1 composite/Y signal input

No.	Pin Name	I/O	Pin Function
151	VRB1	–	ADC1 bottom reference voltage
152	ACYI	I	ADC1 composite/Y signal input
153	VRT1	–	ADC1 top reference voltage
154	ACSI	I	ADC1 composite/Y signal input
155	AVDD3	–	Analog power supply for ADC (3.3V)
156	AVDD3	–	Analog power supply for ADC (3.3V)
157	VRT2	–	ADC2 top reference voltage
158	ASCI	I	ADC2 separate C signal input
159	VRB2	–	ADC2 bottom reference voltage
160	AGI	I	ADC2 RGB component G signal input
161	VCOM2	–	ADC2 common-mode reference voltage
162	ACBI	I	ADC3 color-difference component Cb signal input
163	VRT3	–	ADC3 top reference voltage
164	ABI	I	ADC3 RGB component B signal input
165	VRB3	–	ADC3 bottom reference voltage
166	VCOM3	–	ADC3 common-mode reference voltage
167	AVDD3	–	Analog power supply for ADC (3.3V)
168	AVDD3	–	Analog power supply for ADC (3.3V)
169	VCOM4	–	ADC4 common-mode reference voltage
170	ACRI	I	ADC4 color-difference component Cr signal input
171	VLPF2	–	Analog test output
172	ARI	I	ADC3 RGB component R signal input
173	VRB4	–	ADC4 bottom reference voltage
174	VRT4	–	ADC4 top reference voltage
175	AGND	–	Analog ground
176	AGND	–	Analog ground

■ TVP5150AM1PBS (MR MAIN ASSY : IC6001) (PDP-R06XE only)

• Video Decoder (for Subscreen)

● Pin Arrangement (Top view)

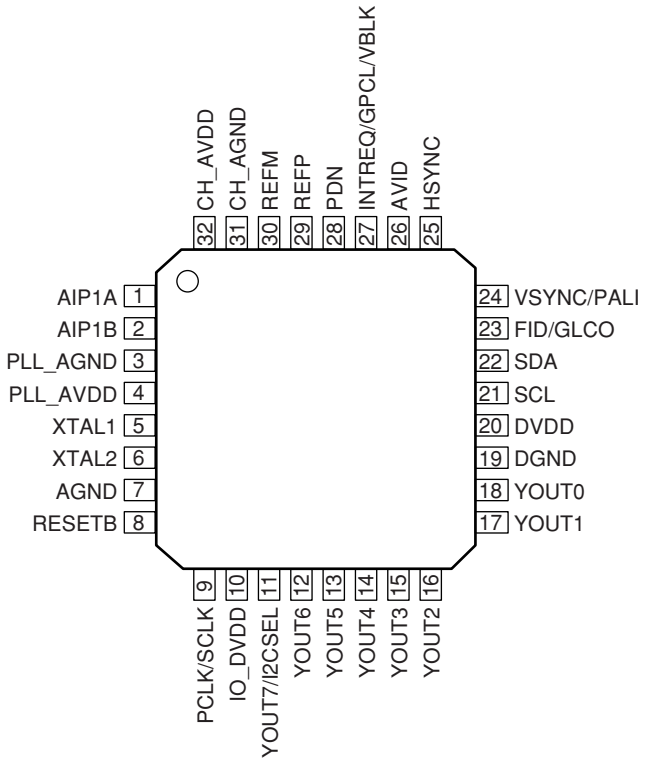

● Block Diagram

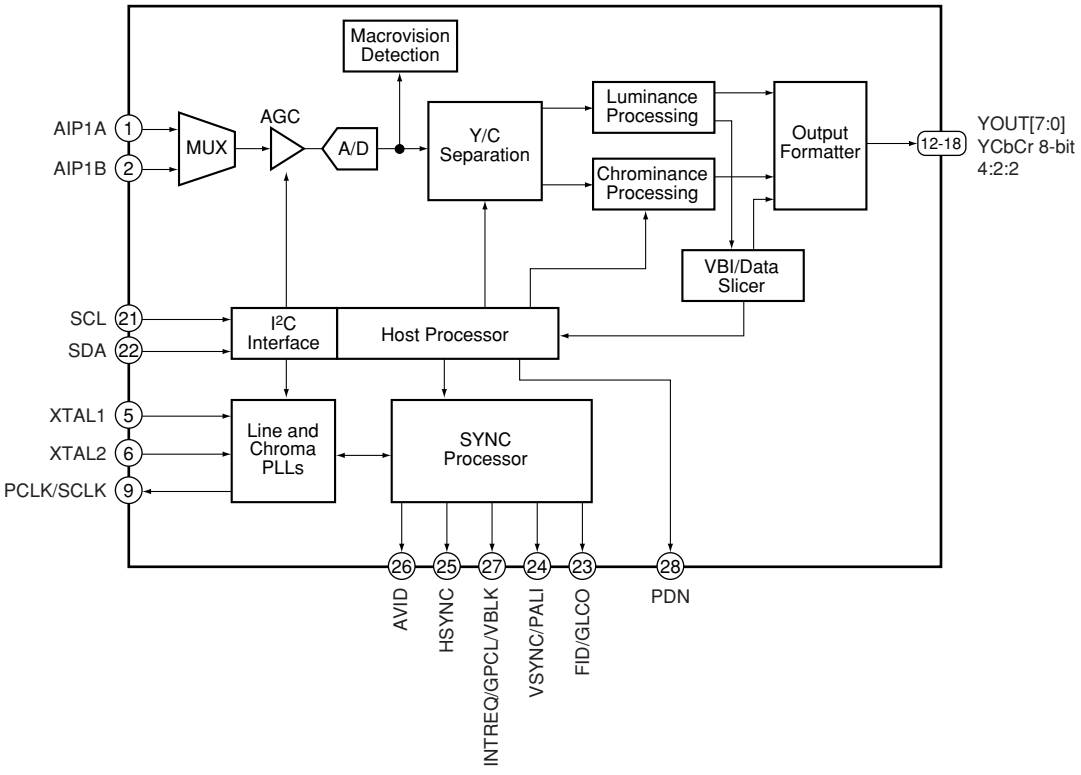

● **Pin Function**

No.	Pin Name	I/O	Pin Function
1	AIP1A	I	Analog input
2	AIP1B	I	Analog input
3	PLL_AGND	I	PLL ground Connect to analog ground.
4	PLL_AVDD	I	PLL power supply (1.8V)
5	XTAL1	I	External clock reference
6	XTAL2	O	External clock reference
7	AGND	I	Substrate Connect to analog ground.
8	RESETB	I	Active-low reset
9	PCLK/SCLK	O	System clock at either 1x or 2x the frequency of the pixel clock
10	IO_DVDD	I	Digital power supply (3.3V)
11	YOUT(7)/I2CSEL	I/O	I2CSEL: Determines address for I²C (sampled during reset) YOUT7: MSB of output decoded ITU-R BT.656 output/YCbCr 4:2:2 output
12	YOUT6	I/O	Output decoded ITU-R BT.656 output/YCbCr 4:2:2 output with discrete sync
13	YOUT5	I/O	Output decoded ITU-R BT.656 output/YCbCr 4:2:2 output with discrete sync
14	YOUT4	I/O	Output decoded ITU-R BT.656 output/YCbCr 4:2:2 output with discrete sync
15	YOUT3	I/O	Output decoded ITU-R BT.656 output/YCbCr 4:2:2 output with discrete sync
16	YOUT2	I/O	Output decoded ITU-R BT.656 output/YCbCr 4:2:2 output with discrete sync
17	YOUT1	I/O	Output decoded ITU-R BT.656 output/YCbCr 4:2:2 output with discrete sync
18	YOUT0	I/O	Output decoded ITU-R BT.656 output/YCbCr 4:2:2 output with discrete sync
19	DGND	I	Digital ground
20	DVDD	I	Digital power supply (1.8V)
21	SCL	I/O	I²C serial clock (open drain)
22	SDA	I/O	I²C serial data (open drain)
23	FID/GLCO	O	FID: Odd/even field indicator or vertical lock indicator GLCO: This serial output carries color PLL information
24	VSYNC/PALI	O	VSYNC: Vertical synchronization signal PALI: PAL line indicator or horizontal lock indicator
25	HSYNC	O	Horizontal synchronization signal
26	AVID	O	Active video indicator
27	INTREQ/GPCL /VBLK	I/O	INTREQ: Interrupt request output GPCL: General-purpose control logic
28	PDN	I	Power-down terminal (active low)
29	REFP	I	A/D reference supply
30	REFM	I	A/D reference ground
31	CH_AGND	I	Analog ground
32	CH_AVDD	I	Analog power supply (1.8V)

K4S161622H-TC60 (MR MAIN ASSY : IC6002)

• 16M SDRAM (for Main VDEC)

● Pin Arrangement (Top view)

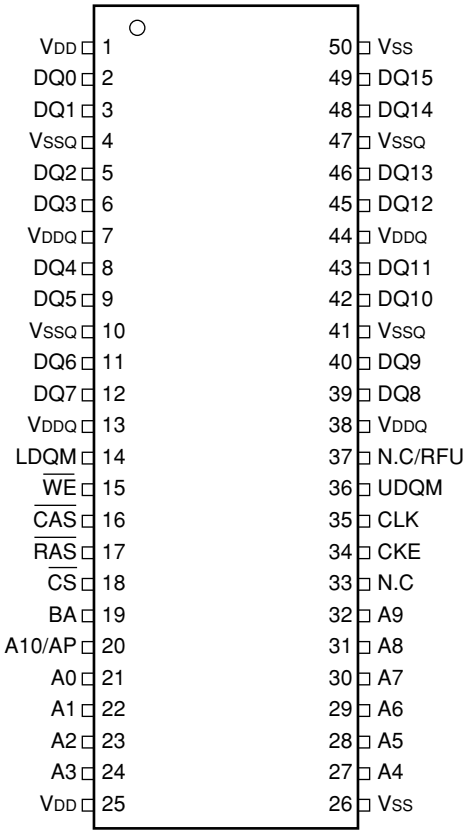

● Block Diagram

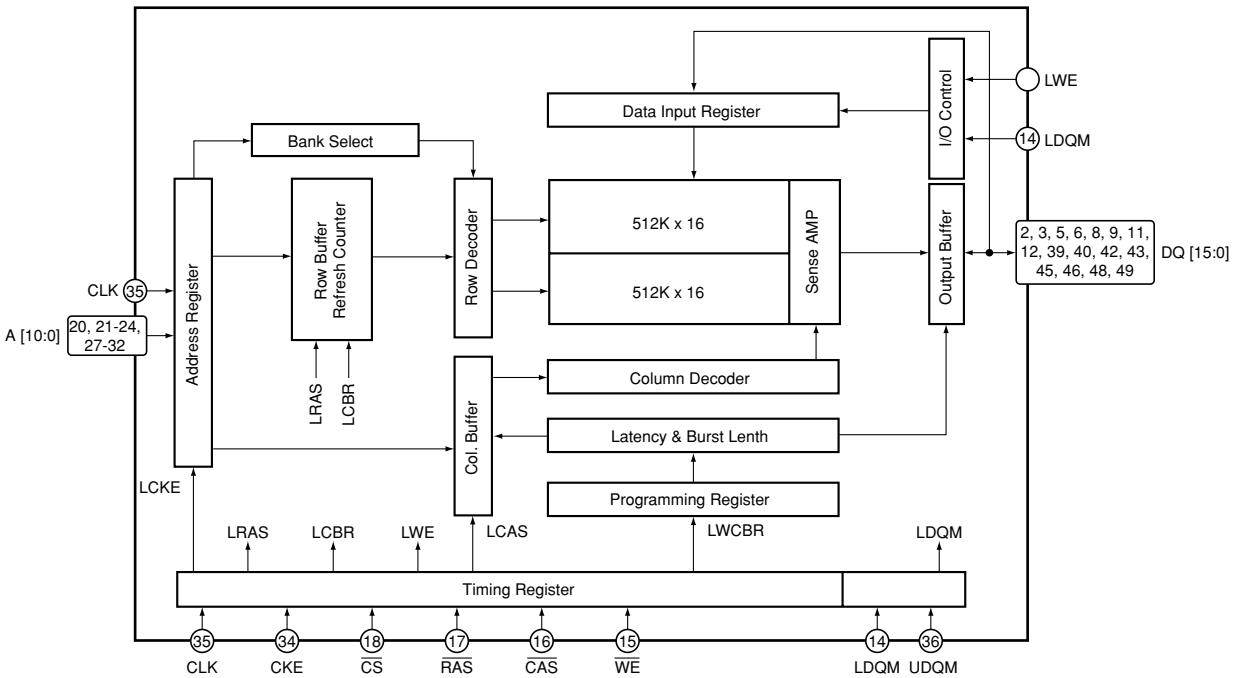

● **Pin Function**

No.	Pin Name	I/O	Pin Function	No.	Pin Name	I/O	Pin Function
1	V_{DD}	–	Power supply	26	V_{SS}	–	Ground
2	DQ0	I/O	Data input / output	27	A4	I	Address input
3	DQ1	I/O	Data input / output	28	A5	I	Address input
4	V_{SSQ}	–	Ground for data output	29	A6	I	Address input
5	DQ2	I/O	Data input / output	30	A7	I	Address input
6	DQ3	I/O	Data input / output	31	A8	I	Address input
7	V_{DDQ}	–	Power supply for data output	32	A9	I	Address input
8	DQ4	I/O	Data input / output	33	N.C	–	No connection
9	DQ5	I/O	Data input / output	34	CKE	I	Clock enable input
10	V_{SSQ}	–	Ground for data output	35	CLK	I	System clock input
11	DQ6	I/O	Data input / output	36	UDQM	I	Data input / output mask input
12	DQ7	I/O	Data input / output	37	N.C/RFU	–	No connection / Reserved for future use
13	V_{DDQ}	–	Power supply for data output	38	V_{DDQ}	–	Power supply for data output
14	LDQM	I	Data input / output mask input	39	DQ8	I/O	Data input / output
15	$\overline{WE}$	I	Write enable input	40	DQ9	I/O	Data input / output
16	$\overline{CAS}$	I	Column address strobe input	41	V_{SSQ}	–	Ground for data output
17	$\overline{RAS}$	I	Row address strobe input	42	DQ10	I/O	Data input / output
18	$\overline{CS}$	I	Chip select input	43	DQ11	I/O	Data input / output
19	BA	I	Bank select address input	44	V_{DDQ}	–	Power supply for data output
20	A10/AP	I	Address input	45	DQ12	I/O	Data input / output
21	A0	I	Address input	46	DQ13	I/O	Data input / output
22	A1	I	Address input	47	V_{SSQ}	–	Ground for data output
23	A2	I	Address input	48	DQ14	I/O	Data input / output
24	A3	I	Address input	49	DQ15	I/O	Data input / output
25	V_{DD}	–	Power supply	50	V_{SS}	–	Ground

AD9985KSTZ-110 (MR MAIN ASSY : IC6201)

• ADC

● Pin Arrangement (Top view)

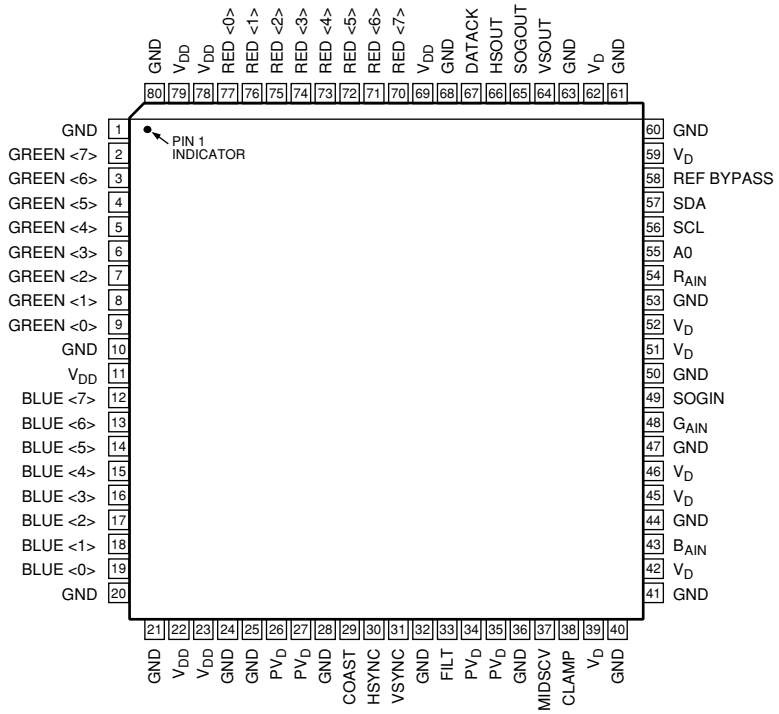

● Block Diagram

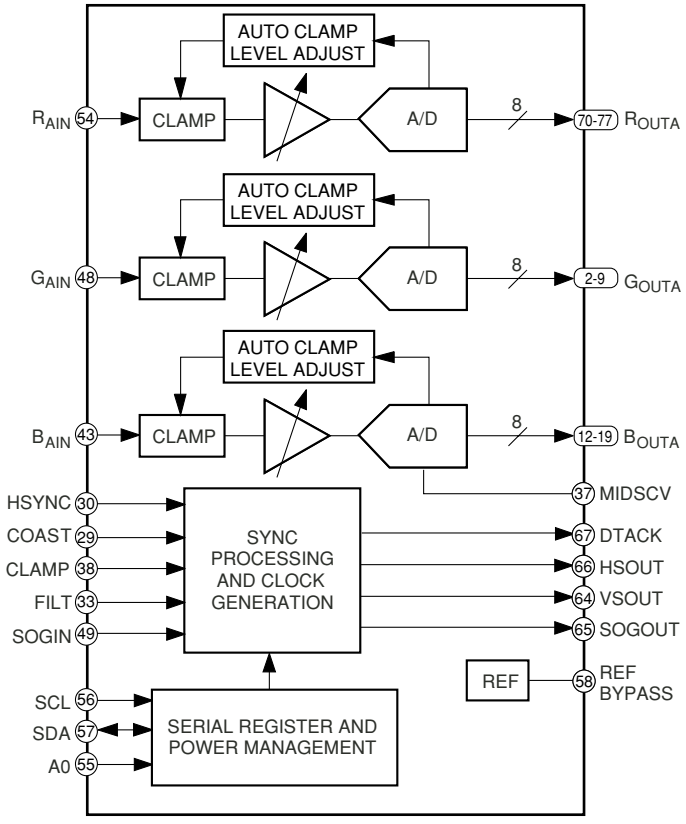

● **Pin Function**

Pin Type	No.	PIN Name	Pin Function
Inputs	54	RAIN	Analog input for converter R
	48	GAIN	Analog input for converter G
	43	BAIN	Analog input for converter B
	30	HSYNC	Horizontal sync input
	31	VSYNC	Vertical sync input
	49	SOGIN	Input for sync-on green
	38	CLAMP	Clamp input (External CLAMP signal)
	29	COAST	PLL COAST signal input
Outputs	70-77	Red [7 : 0]	Outputs of converter red, bit 7 is the MSB
	2-9	Green [7 : 0]	Outputs of converter green, bit 7 is the BSB
	12-19	Blue [7 : 0]	Outputs of converter blue, bit 7 is the BSB
	67	DATACK	Data output clock
	66	HSOUT	HSYNC output (Phase-aligned with DATACK)
	64	VSOUT	VSYNC output (Phase-aligned with DATACK)
	65	SOGOUT	Sync-on-green slicer output
Reference	58	REF BYPASS	Internal reference bypass
	37	MIDSCV	Internal midscale voltage bypass
	33	FILT	Connection for external filter components for internal PLL
Power Supply	39, 42, 45, 46, 51, 52, 59, 62	VD	Analog power supply
	11, 22, 23, 69, 78, 79	VDD	Output power supply
	26, 27, 34, 35	PVD	PLL power supply
	1, 10, 20, 21, 24, 25, 28, 32, 36, 40, 41, 44, 47, 50, 53, 60, 61, 63 68, 80	GND	Ground
Control	57	SDA	Serial port data I/O
	56	SCL	Serial port data clock (100 kHz maximum)
	55	A0	Serial port address input 1

■ SII9021CTU (MR MAIN ASSY : IC6404)

• HDMI Rx

● Pin Arrangement (Top view)

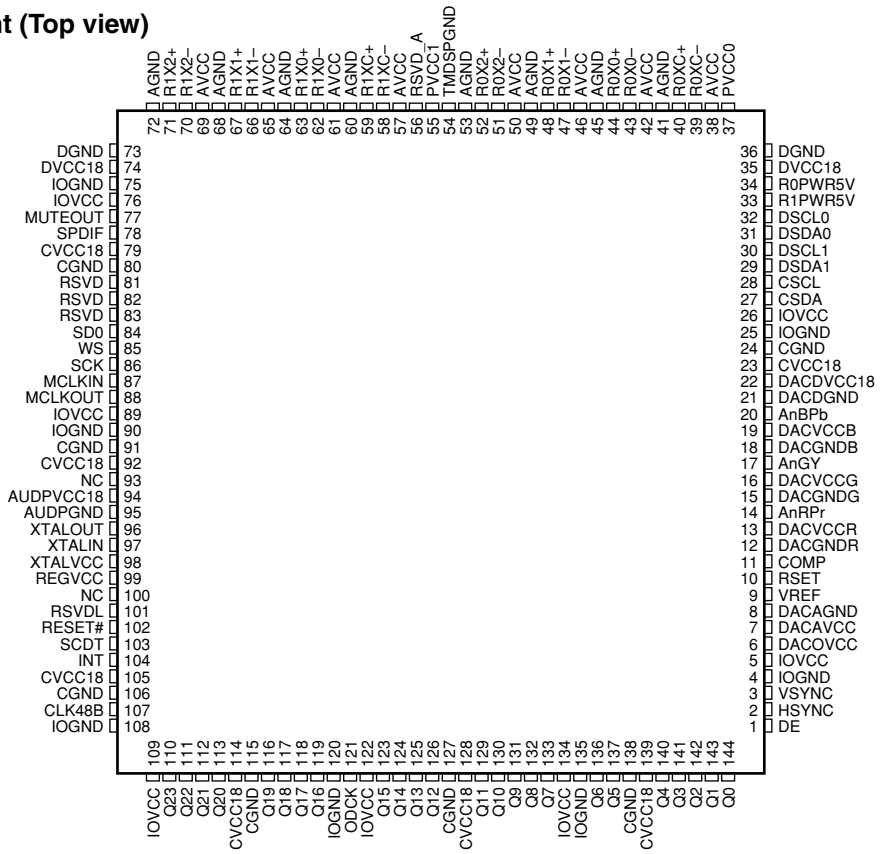

● Block Diagram

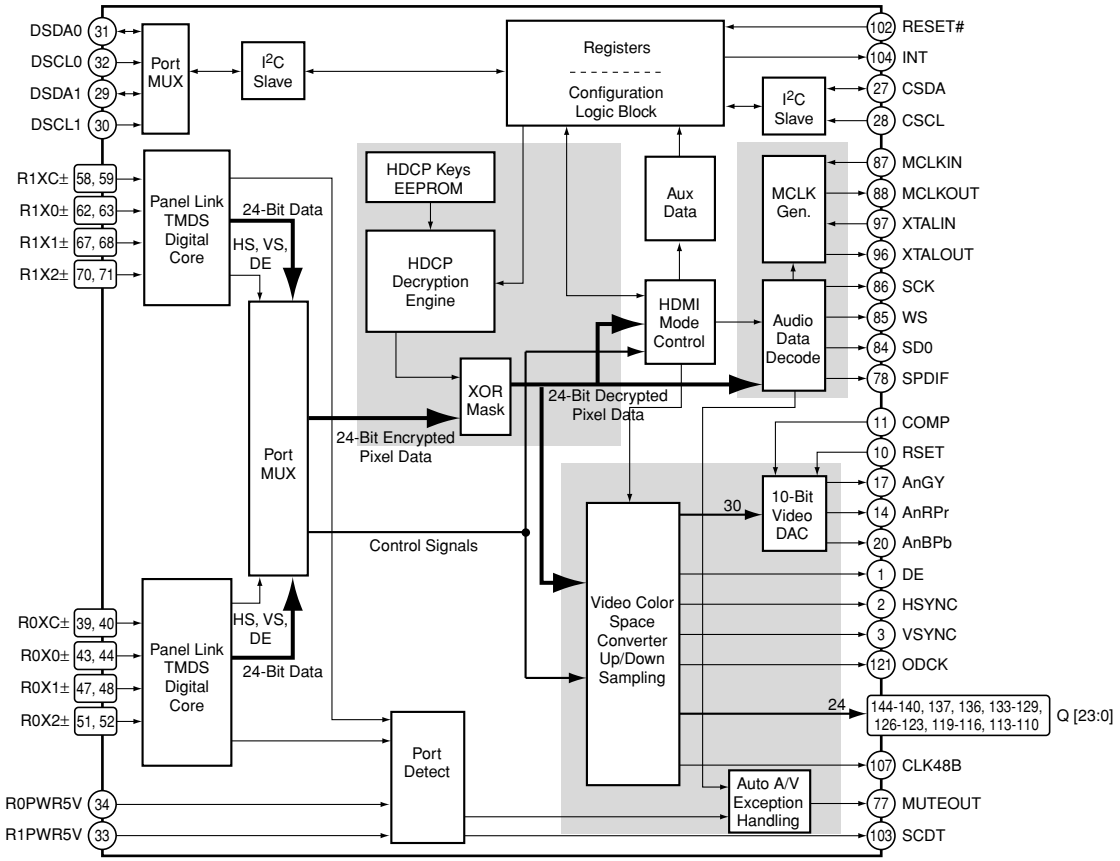

● **Pin Function**

No.	Pin Name	I/O	Pin Function
1	DE	O	Data enable
2	HSYNC	O	Horizontal sync output control signal
3	VSYNC	O	Vertical sync output control signal
4	IOGND	–	Input / output pin ground
5	IOVCC	–	Input / output pin VCC
6	DACOVCC	–	DAC output VCC
7	DACAVCC	–	DAC analog VCC
8	DACAGND	–	DAC analog ground
9	VREF	–	–
10	RSET	–	Full scale adjust resistor
11	COMP	–	Compensation
12	DACGNDR	–	DAC red ground
13	DACVCCR	–	DAC red VDD
14	AnRPr	O	Analog video red, Pr output
15	DACGNDG	–	DAC green ground
16	DACVCCG	–	DAC green VDD
17	AnGY	O	Analog video green, Y output
18	DACGNDB	–	DAC blue ground
19	DACVCCB	–	DAC blue VDD
20	AnBPb	O	Analog video blue, Pb output
21	DACDGND	–	DAC digital ground
22	DACDVCC18	–	DAC digital VCC
23	CVCC18	–	Digital logic VCC
24	CGND	–	Digital logic ground
25	IOGND	–	Input / output pin ground
26	IOVCC	–	Input / output pin VCC
27	CSDA	I/O	Configuration I^2C data
28	CSCL	I	Configuration I^2C clock
29	DSDA1	I/O	DDC I^2C data for port 1
30	DSCL1	I	DDC I^2C clock for port 1
31	DSDA0	I/O	DDC I^2C data for port 0
32	DSCL0	I	DDC I^2C clock for port 0
33	R1PWR5V	I	Port 1 transmitter detect
34	R0PWR5V	I	Port 0 transmitter detect
35	DVCC18	–	ACR PLL digital VCC
36	DGND	–	ACR PLL ground
37	PVCC0	–	TMDS port 0 PLL VCC
38	AVCC	–	TMDS analog VCC
39	R0XC–	I	TMDS input clock
40	R0XC+	I	TMDS input clock
41	AGND	–	TMDS analog ground
42	AVCC	–	TMDS analog VCC
43	R0X0–	I	TMDS input data
44	R0X0+	I	TMDS input data
45	AGND	–	TMDS analog ground
46	AVCC	–	TMDS analog VCC
47	R0X1–	I	TMDS input data
48	R0X1+	I	TMDS input data
49	AGND	–	TMDS analog ground
50	AVCC	–	TMDS analog VCC

No.	Pin Name	I/O	Pin Function
51	R0X2–	I	TMDS input data
52	R0X2+	I	TMDS input data
53	AGND	–	TMDS analog ground
54	TMDSPGND	–	TMDS PLL ground
55	PVCC1	–	TMDS port 1 PLL VCC
56	RSVD_A	–	Reserved pin
57	AVCC	–	TMDS analog VCC
58	R1XC–	I	TMDS input clock
59	R1XC+	I	TMDS input clock
60	AGND	–	TMDS analog ground
61	AVCC	–	TMDS analog VCC
62	R1X0–	I	TMDS input data
63	R1X0+	I	TMDS input data
64	AGND	–	TMDS analog ground
65	AVCC	–	TMDS analog VCC
66	R1X1–	I	TMDS input data
67	R1X1+	I	TMDS input data
68	AGND	–	TMDS analog ground
69	AVCC	–	TMDS analog VCC
70	R1X2–	I	TMDS input data
71	R1X2+	I	TMDS input data
72	AGND	–	TMDS analog ground
73	DGND	–	ACR PLL ground
74	DVCC18	–	ACR PLL digital VCC
75	IOGND	–	Input / output pin ground
76	IOVCC	–	Input / output pin VCC
77	MUTEOUT	O	Mute audio output
78	SPDIF	O	S/PDIF audio output
79	CVCC18	–	Digital logic VCC
80	CGND	–	Digital logic ground
81	RSVD	O	–
82	RSVD	O	–
83	RSVD	O	–
84	SD0	O	I^2S serial data output
85	WS	O	I^2S word select output
86	SCK	O	I^2S serial clock output
87	MCLKIN	I	Audio master clock input reference
88	MCLKOUT	O	Audio master clock output
89	IOVCC	–	Input / output pin VCC
90	IOGND	–	Input / output pin ground
91	CGND	–	Digital logic ground
92	CVCC18	–	Digital logic VCC
93	NC	–	No connection
94	AUDPVCC18	–	ACR PLL VCC
95	AUDPGND	–	ACR PLL ground
96	XTALOUT	O	Crystal clock output
97	XTALIN	I	Crystal clock input
98	XTALVCC	–	ACR PLL crystal input VCC
99	REGVCC	–	ACR PLL regulator VCC
100	NC	–	No connection

No.	Pin Name	I/O	Pin Function
101	RSVDL	I	Reserved, must be tied LOW
102	RESET#	I	Reset pin, active LOW
103	SCDT	O	Indicates active video at HDMI input port
104	INT	O	Interrupt output
105	CVCC18	–	Digital logic VCC
106	CGND	–	Digital logic ground
107	CLK48B	I/O	Data bus latch enable
108	IOGND	–	Input / output pin ground
109	IOVCC	–	Input / output pin VCC
110	Q23	O	24-bit output pixel data bus
111	Q22	O	24-bit output pixel data bus
112	Q21	O	24-bit output pixel data bus
113	Q20	O	24-bit output pixel data bus
114	CVCC18	–	Digital logic VCC
115	CGND	–	Digital logic ground
116	Q19	O	24-bit output pixel data bus
117	Q18	O	24-bit output pixel data bus
118	Q17	O	24-bit output pixel data bus
119	Q16	O	24-bit output pixel data bus
120	IOGND	–	Input / output pin ground
121	ODCK	O	Output data clock
122	IOVCC	–	Input / output pin VCC
123	Q15	O	24-bit output pixel data bus
124	Q14	O	24-bit output pixel data bus
125	Q13	O	24-bit output pixel data bus
126	Q12	O	24-bit output pixel data bus
127	CGND	–	Digital logic ground
128	CVCC18	–	Digital logic VCC
129	Q11	O	24-bit output pixel data bus
130	Q10	O	24-bit output pixel data bus
131	Q9	O	24-bit output pixel data bus
132	Q8	O	24-bit output pixel data bus
133	Q7	O	24-bit output pixel data bus
134	IOVCC	–	Input / output pin VCC
135	IOGND	–	Input / output pin ground
136	Q6	O	24-bit output pixel data bus
137	Q5	O	24-bit output pixel data bus
138	CGND	–	Digital logic ground
139	CVCC18	–	Digital logic VCC
140	Q4	O	24-bit output pixel data bus
141	Q3	O	24-bit output pixel data bus
142	Q2	O	24-bit output pixel data bus
143	Q1	O	24-bit output pixel data bus
144	Q0	O	24-bit output pixel data bus

K4S643232H-TC60 (MR MAIN ASSY : IC6801, IC6802)

• 64M SDRAM (for Silvia)

● Pin Arrangement (Top view)

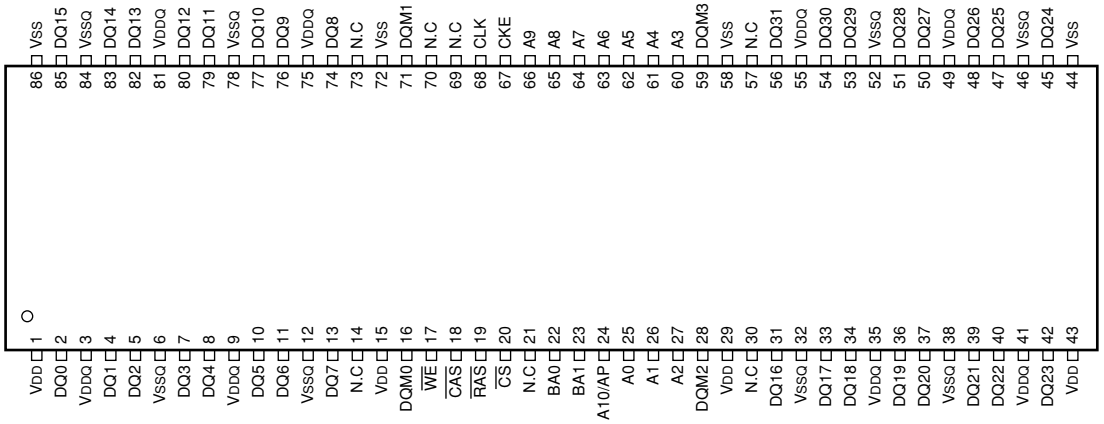

● Block Diagram

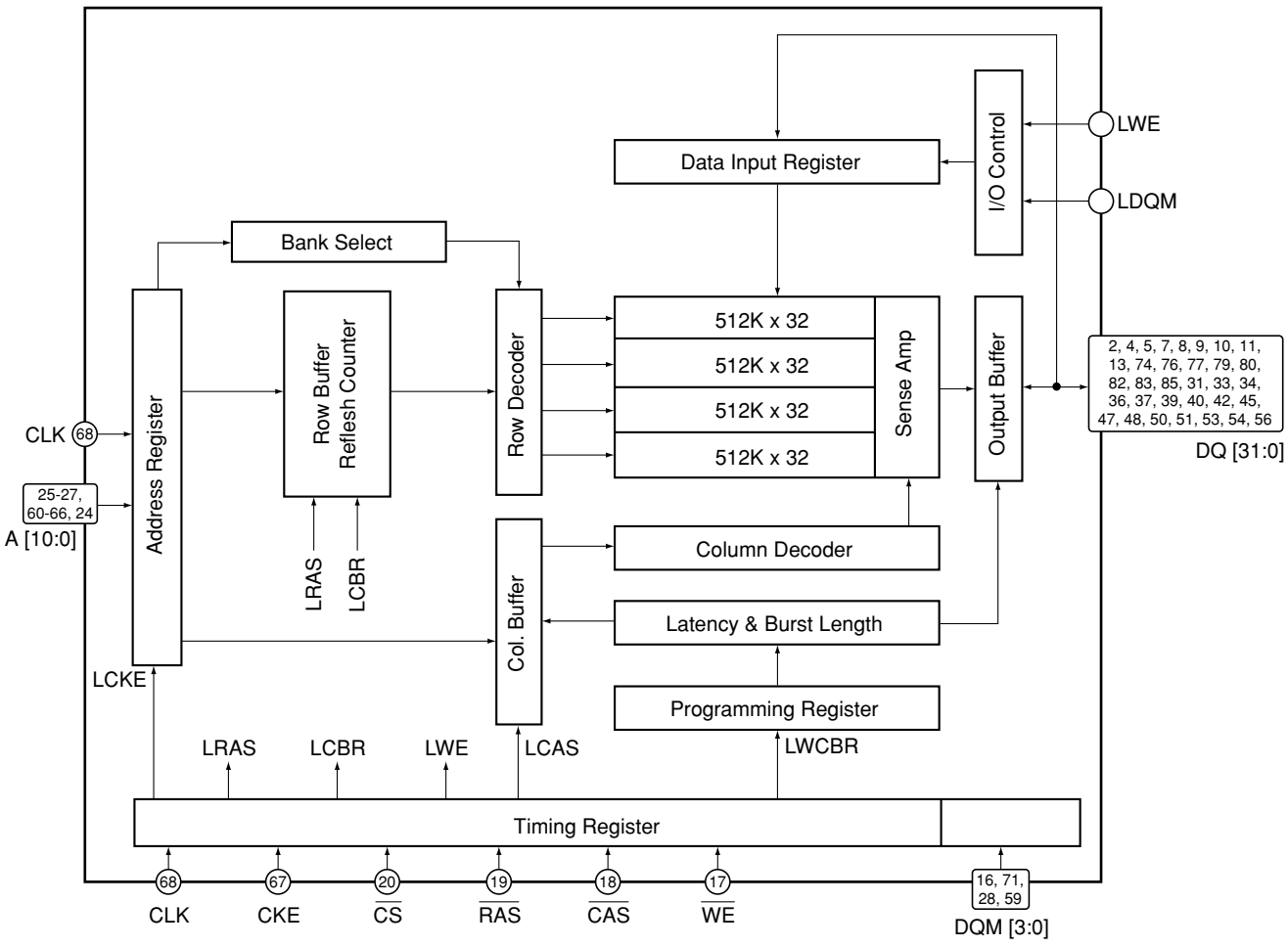

● Pin Function

No.	Pin Name	I/O	Pin Function	No.	Pin Name	I/O	Pin Function
1	V_{DD}	–	Power supply	44	V_{SS}	–	Ground
2	DQ0	I/O	Data input / output	45	DQ24	I/O	Data input / output
3	V_{DDQ}	–	Power supply for data output	46	V_{SSQ}	–	Ground for data output
4	DQ1	I/O	Data input / output	47	DQ25	I/O	Data input / output
5	DQ2	I/O	Data input / output	48	DQ26	I/O	Data input / output
6	V_{SSQ}	–	Ground for data output	49	V_{DDQ}	–	Power supply for data output
7	DQ3	I/O	Data input / output	50	DQ27	I/O	Data input / output
8	DQ4	I/O	Data input / output	51	DQ28	I/O	Data input / output
9	V_{DDQ}	–	Power supply for data output	52	V_{SSQ}	–	Ground for data output
10	DQ5	I/O	Data input / output	53	DQ29	I/O	Data input / output
11	DQ6	I/O	Data input / output	54	DQ30	I/O	Data input / output
12	V_{SSQ}	–	Ground for data output	55	V_{DDQ}	–	Power supply for data output
13	DQ7	I/O	Data input / output	56	DQ31	I/O	Data input / output
14	N.C	–	No connection	57	N.C	–	No connection
15	V_{DD}	–	Power supply	58	V_{SS}	–	Ground
16	DQM0	I	Data input / output mask input	59	DQM3	I	Data input / output mask input
17	$\overline{WE}$	I	Write enable input	60	A3	I	Address input
18	$\overline{CAS}$	I	Column address strobe input	61	A4	I	Address input
19	$\overline{RAS}$	I	Row address strobe input	62	A5	I	Address input
20	$\overline{CS}$	I	Chip select input	63	A6	I	Address input
21	N.C	–	No connection	64	A7	I	Address input
22	BA0	I	Bank select address input	65	A8	I	Address input
23	BA1	I	Bank select address input	66	A9	I	Address input
24	A10/AP	I	Address input	67	CKE	I	Clock enable input
25	A0	I	Address input	68	CLK	I	System clock input
26	A1	I	Address input	69	N.C	–	No connection
27	A2	I	Address input	70	N.C	–	No connection
28	DQM2	I	Data input / output mask input	71	DQM1	I	Data input / output mask input
29	V_{DD}	–	Power supply	72	V_{SS}	–	Ground
30	N.C	–	No connection	73	N.C	–	No connection
31	DQ16	I/O	Data input / output	74	DQ8	I/O	Data input / output
32	V_{SSQ}	–	Ground for data output	75	V_{DDQ}	–	Power supply for data output
33	DQ17	I/O	Data input / output	76	DQ9	I/O	Data input / output
34	DQ18	I/O	Data input / output	77	DQ10	I/O	Data input / output
35	V_{DDQ}	–	Power supply for data output	78	V_{SSQ}	–	Ground for data output
36	DQ19	I/O	Data input / output	79	DQ11	I/O	Data input / output
37	DQ20	I/O	Data input / output	80	DQ12	I/O	Data input / output
38	V_{SSQ}	–	Ground for data output	81	V_{DDQ}	–	Power supply for data output
39	DQ21	I/O	Data input / output	82	DQ13	I/O	Data input / output
40	DQ22	I/O	Data input / output	83	DQ14	I/O	Data input / output
41	V_{DDQ}	–	Power supply for data output	84	V_{SSQ}	–	Ground for data output
42	DQ23	I/O	Data input / output	85	DQ15	I/O	Data input / output
43	V_{DD}	–	Power supply	86	V_{SS}	–	Ground

■ S29JL032H70TFI21 (MR MAIN ASSY : IC7002)

• 32M Flash for Carrera MANTA

● Pin Arrangement (Top view)

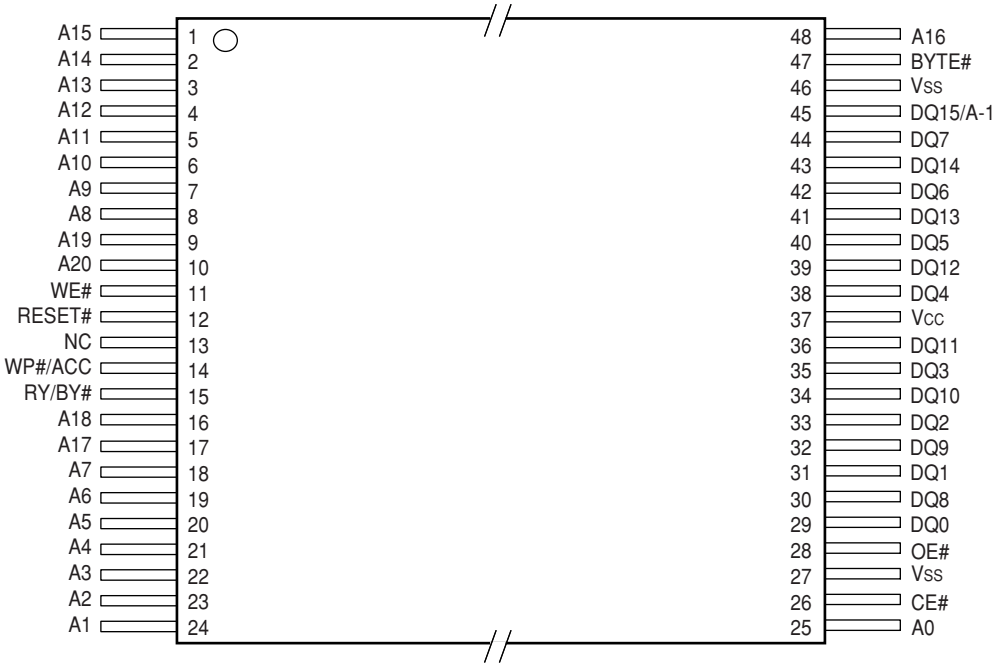

● Block Diagram

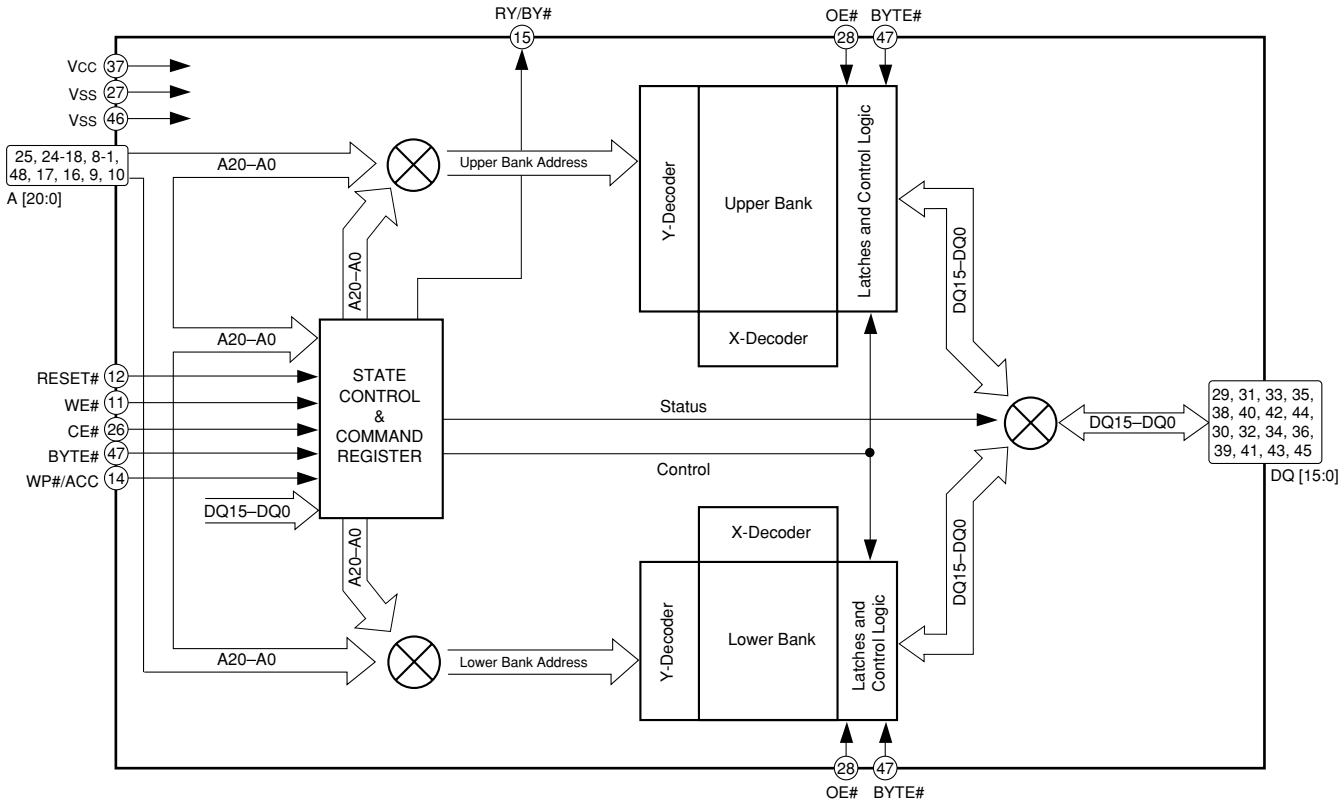

● **Pin Function**

No.	Pin Name	I/O	Pin Function
1	A15	I	Address input
2	A14	I	Address input
3	A13	I	Address input
4	A12	I	Address input
5	A11	I	Address input
6	A10	I	Address input
7	A9	I	Address input
8	A8	I	Address input
9	A19	I	Address input
10	A20	I	Address input
11	WE#	I	Write enable input
12	RESET#	I	Hardware reset, active LOW
13	NC	–	No connection
14	WP#/ACC	I	Hardware write protect / Acceleration
15	RY/BY#	O	Ready / Busy output
16	A18	I	Address input
17	A17	I	Address input
18	A7	I	Address input
19	A6	I	Address input
20	A5	I	Address input
21	A4	I	Address input
22	A3	I	Address input
23	A2	I	Address input
24	A1	I	Address input
25	A0	I	Address input
26	CE#	I	Chip enable input
27	V_{SS}	–	Device ground
28	OE#	I	Output enable input
29	DQ0	I/O	Data input / output (x16-only device)
30	DQ8	I/O	Data input / output (x16-only device)
31	DQ1	I/O	Data input / output (x16-only device)
32	DQ9	I/O	Data input / output (x16-only device)
33	DQ2	I/O	Data input / output (x16-only device)
34	DQ10	I/O	Data input / output (x16-only device)
35	DQ3	I/O	Data input / output (x16-only device)
36	DQ11	I/O	Data input / output (x16-only device)
37	V_{CC}	–	3.0V only single power supply
38	DQ4	I/O	Data input / output (x16-only device)
39	DQ12	I/O	Data input / output (x16-only device)
40	DQ5	I/O	Data input / output (x16-only device)
41	DQ13	I/O	Data input / output (x16-only device)
42	DQ6	I/O	Data input / output (x16-only device)
43	DQ14	I/O	Data input / output (x16-only device)
44	DQ7	I/O	Data input / output (x16-only device)
45	DQ15/A-1	I/O	Data input / output (word mode) / LSB address input (byte mode)
46	V_{SS}	–	Device ground
47	BYTE#	I	Selects 8-bit or 16-bit mode
48	A16	I	Address input

■ SII170BCLG64 (MR MAIN ASSY : IC7202)

• DVI Tx

● Pin Arrangement (Top view)

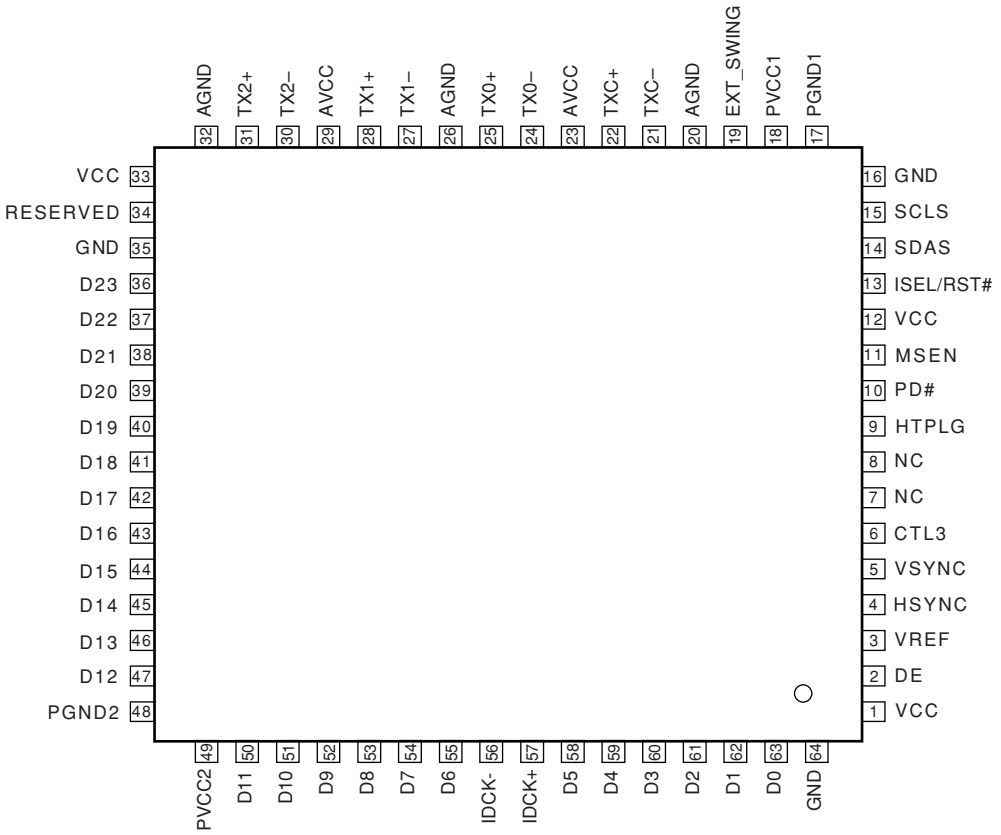

● Block Diagram

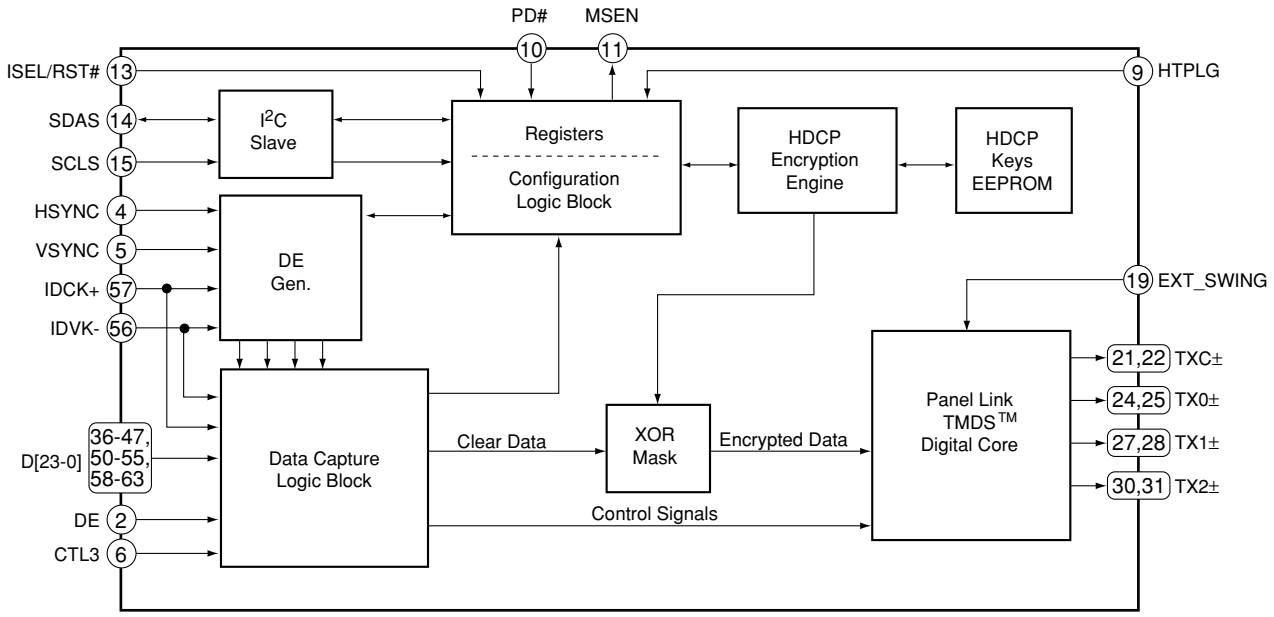

● Pin Function

No.	Pin Name	I/O	Pin Function
1	VCC	–	Digital power supply (3.3V)
2	DE	I	Data enable
3	VREF	I	3.3V fixed
4	HSYNC	I	Horizontal sync. control signal input
5	VSYNC	I	Vertical sync. control signal input
6	CTL3	I	External CTL3 input
7	NC	–	No connection
8	NC	–	No connection
9	HTPLG	I	Monitor chrage input
10	PD#	I	Power down input (Active low)
11	MSEN	O	Monitor sense output (open-collector output)
12	VCC	–	Digital power supply (3.3V)
13	ISEL/RST#	I	I2C interface selecting input High: I2C interface is active
14	SDAS	I/O	DDC I2C data input/output
15	SCLS	I	DDC I2C clock input
16	GND	–	Digital ground
17	PGND1	–	PLL analog ground
18	PVCC1	–	Analog power supply for PLL of primary side (3.3V)
19	EXT_SWING	I	Voltage regulation adjustment
20	AGND	–	Analog ground
21	TXC–	O	Differential signal clock output of TMDS Low voltage
22	TXC+	O	Differential signal clock output of TMDS Low voltage
23	AVCC	–	Analog power supply (3.3V)
24	TX0–	O	Differential signal clock output of TMDS Low voltage
25	TX0+	O	Differential signal clock output of TMDS Low voltage
26	AGND	–	Analog ground
27	TX1–	O	Differential signal clock output of TMDS Low voltage
28	TX1+	O	Differential signal clock output of TMDS Low voltage
29	AVCC	–	Analog power supply (3.3V)
30	TX2-	O	Differential signal clock output of TMDS Low voltage
31	TX2+	O	Differential signal clock output of TMDS Low voltage
32	AGND	–	Analog ground
33	VCC	–	Digital power supply (3.3V)
34	RESERVED	I	Reserved pin for Silicon Image Normally, fixed to low.
35	GND	–	Digital ground
36	D23	I	24-bit pixel bus input
37	D22	I	24-bit pixel bus input
38	D21	I	24-bit pixel bus input
39	D20	I	24-bit pixel bus input
40	D19	I	24-bit pixel bus input

No.	Pin Name	I/O	Pin Function
41	D18	I	24-bit pixel bus input
42	D17	I	24-bit pixel bus input
43	D16	I	24-bit pixel bus input
44	D15	I	24-bit pixel bus input
45	D14	I	24-bit pixel bus input
46	D13	I	24-bit pixel bus input
47	D12	I	24-bit pixel bus input
48	PGND2	–	PLL analog ground
49	PVCC2	–	Analog power supply for filter PLL (3.3V)
50	D11	I	24-bit / 12-bit pixel bus input
51	D10	I	24-bit / 12-bit pixel bus input
52	D9	I	24-bit / 12-bit pixel bus input
53	D8	I	24-bit / 12-bit pixel bus input
54	D7	I	24-bit / 12-bit pixel bus input
55	D6	I	24-bit / 12-bit pixel bus input
56	IDCK–	I	Data clock - input
57	IDCK+	I	Data clock + input
58	D5	I	24-bit / 12-bit pixel bus input
59	D4	I	24-bit / 12-bit pixel bus input
60	D3	I	24-bit / 12-bit pixel bus input
61	D2	I	24-bit / 12-bit pixel bus input
62	D1	I	24-bit / 12-bit pixel bus input
63	D0	I	24-bit / 12-bit pixel bus input
64	GND	–	Digital ground

■ AXF1149 (MR MAIN ASSY : U4401)

• Front End

● Pin Arrangement

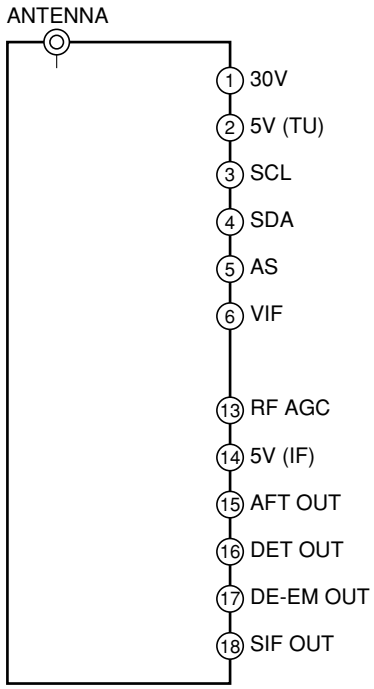

● Pin Function

No.	Pin Name	Pin Function
1	30V	Power supply for 30V
2	5V (TU)	Power supply for tuner
3	SCL	Terminal for I²C bus control
4	SDA	
5	AS	
6	VIF	VIF output
13	RF AFG	RF AGC terminal
14	5V (IF)	Power supply for IF
15	AFT OUT	Analog AFT output
16	DET OUT	VIDEO output (Typical = 1.0Vp-p)
17	DE-EM OUT	Audio output
18	SIF OUT	SIF output

■ AXY1117 (MR MAIN ASSY)

• 3 Outputs DD Control Unit

● Pin Arrangement

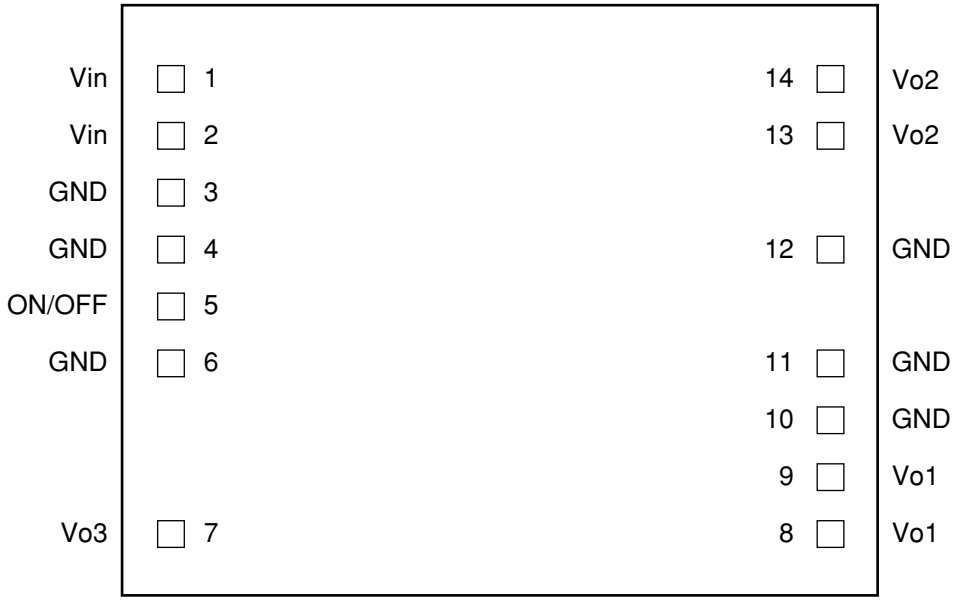

● Pin Function

No.	Pin Name	Pin Function
1	Vin	Input
2	Vin	
3	GND	Ground for input side
4	GND	
5	ON/OFF	Output ON/OFF
6	GND	Ground for output side
7	Vo3	1.8V output
8	Vo1	3.3V output
9	Vo1	3.3V output
10	GND	Ground for output side
11	GND	
12	GND	
13	Vo2	1.2V output
14	Vo2	1.2V output

8. PANEL FACILITIES

8.1 PDP-R06XE

■ Front view

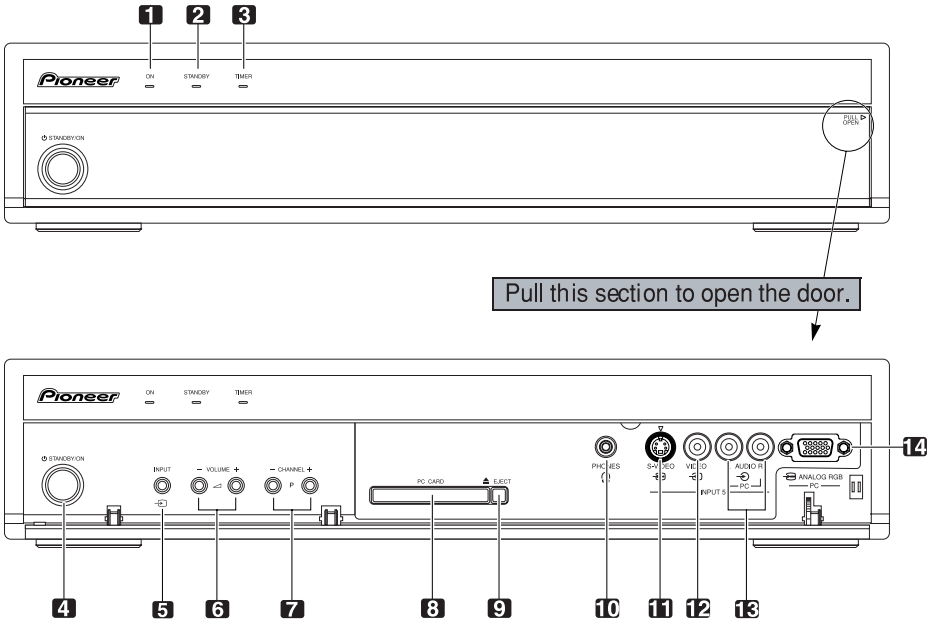

1 POWER ON indicator
2 STANDBY indicator
3 TIMER indicator
4 **STANDBY/ON** button
5 **INPUT** button
6 **VOLUME +/–** buttons
7 **CHANNEL +/–** buttons
8 PC CARD slot
9 **PC CARD EJECT** button
10 PHONES output terminal
11 INPUT 5 terminal (S-VIDEO)
12 INPUT 5 terminal (VIDEO)
13 INPUT 5/PC INPUT terminal (AUDIO)
14 PC INPUT terminal (ANALOG RGB)

■ Rear view

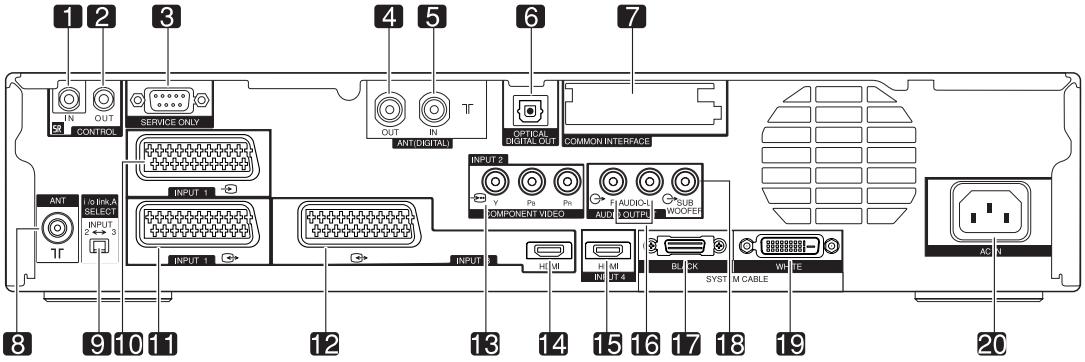

1 CONTROL IN terminal
2 CONTROL OUT terminal
3 RS-232C terminal (used for factory setup)
4 ANT OUT terminal (Antenna through out)
5 ANT IN terminal (Antenna in for DTV)
- Power can be supplied through this terminal

6 DIGITAL OUT terminal (OPTICAL)
7 COMMON INTERFACE slot
- For a CA Module with a smart card

8 ANT (Antenna) input terminal
9 i/o link.A SELECT switch
10 INPUT 1 terminal (SCART)
11 INPUT 2 terminal (SCART)
12 INPUT 3 terminal (SCART)
13 INPUT 2 terminal (COMPONENT VIDEO: Y, P_B, P_R)
14 INPUT 3 terminal (HDMI)
15 INPUT 4 terminal (HDMI)
16 AUDIO OUTPUT termimals
17 SYSTEM CABLE terminal (BLACK)
18 SUB WOOFER OUTPUT terminal
19 SYSTEM CABLE terminal (WHITE)
20 AC IN terminal

■ Remote control unit

This section describes the functions of the buttons available when the TV mode has been selected using the **SELECT** button.

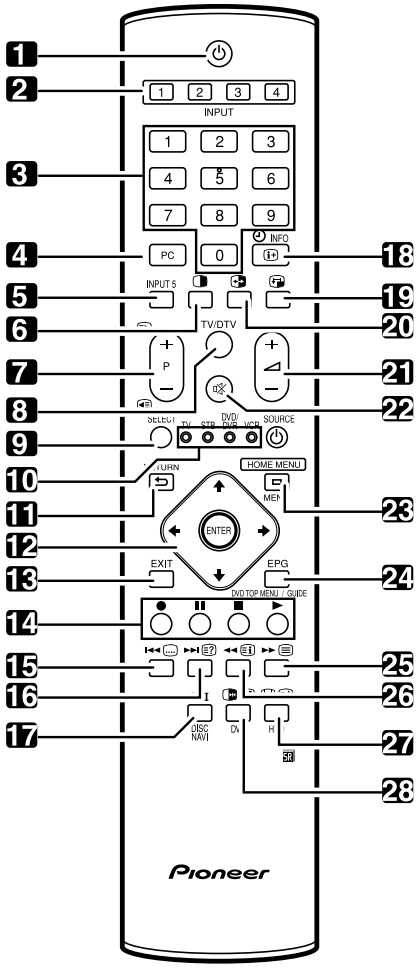

1 ⏻
Turns on the power to the Plasma Display or places it into the standby mode.

2 INPUT
Selects an input source of the Plasma Display. (INPUT 1, INPUT 2, INPUT 3, INPUT 4)

3 0 – 9
TV/External input mode: Selects a channel.
TELETEXT mode: Selects a page.

4 PC
Selects the PC terminal as an input source.

5 INPUT 5
Selects INPUT 5 as the input source of the Plasma Display.

6 ◑
Switches the screen mode among 2-screen, picture-in-picture, and single-screen.

7 P+/P–
TV/External input mode: Selects a channel.
▶/◀
TELETEXT mode: Selects a page.

8 TV/DTV
Switches between the TV and DTV input modes.

9 SELECT Switches the selection among TV, STB, DVD/DVR, and VCR, so that you can control other equipment in connection, using the supplied remote control unit.

10 TV, **STB**, **DVD/DVR**, **VCR**
These indicators show the current selection and status when you control other equipment in connection using the supplied remote control unit.

11 ⮌ **RETURN**
Restores the previous menu screen.

12 ▲/▼/◀/▶
Selects a desired item on the setting screen.
ENTER
Executes a command.

13 EXIT
Returns to the normal screen in one step.

14 Colour (RED/GREEN/YELLOW/BLUE)
TELETEXT mode: Selects a page.

15
TV/External input mode: Jumps to the Teletext subtitle page. DTV input mode: Turns subtitle on and off.

16
TELETEXT mode: Displays hidden characters.

17 I-II
Sets the sound multiplex mode.

18 INFO
TV/External input mode: Displays the channel information. DTV input mode: Displays the banner information.

19
Moves the location of the small screen when in the picture-in-picture mode.

20
Switches between the two screens when in the 2-screen or picture-in-picture mode.

21 +/–
Sets the volume.

22
Mutes the sound.

23 HOME MENU
TV/External Input mode: Displays the Menu screen.

24 EPG
Display the Electronic Programme Guide.

25
Selects the TELETEXT mode.
(all TV image, all TEXT image, TV/TEXT image)

26
TELETEXT mode: Displays an Index page for the CEEFAX/FLOF format. Displays a TOP Over View page for the TOP format.

27
TV/External input mode: Selects the screen size.
TELETEXT mode: Switches Teletext images.
(full/upper half/lower half)

28
TV/External input mode: Freezes a frame from a moving image. Press again to cancel the function.
TELETEXT mode: Stops updating Teletext pages. Press again to release the hold mode.

8.2 PDP-R06FE

■ Front view

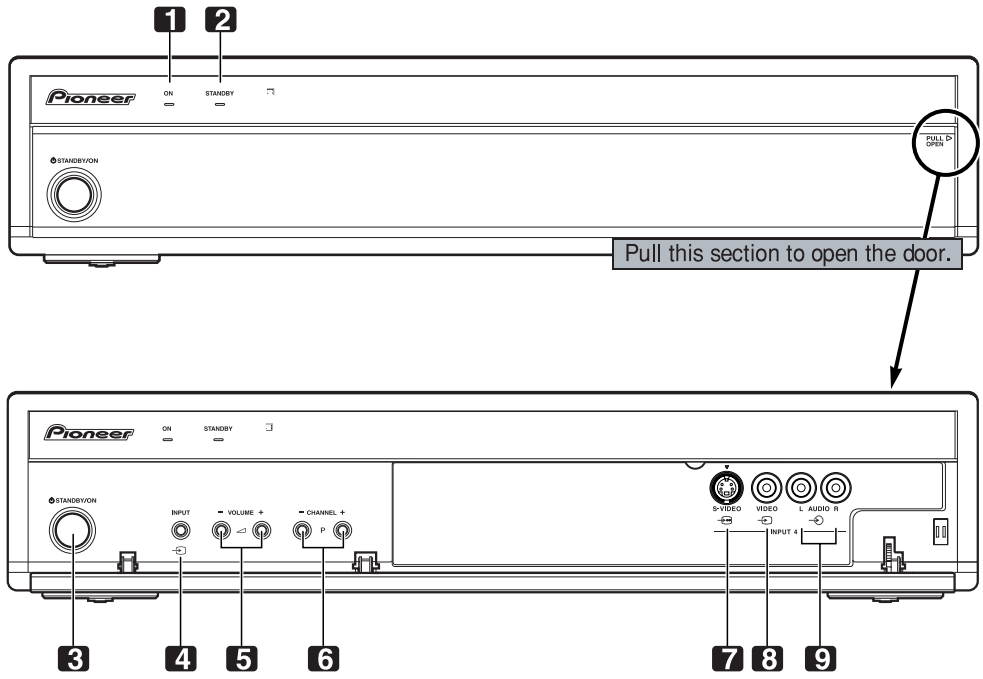

1 POWER ON indicator
2 STANDBY indicator
3 **STANDBY/ON** button
4 **INPUT** button
5 **VOLUME +/–** buttons
6 **CHANNEL +/–** buttons
7 INPUT 4 terminal (S-VIDEO)
8 INPUT 4 terminal (VIDEO)
9 INPUT 4 terminal (AUDIO)

■ Rear view

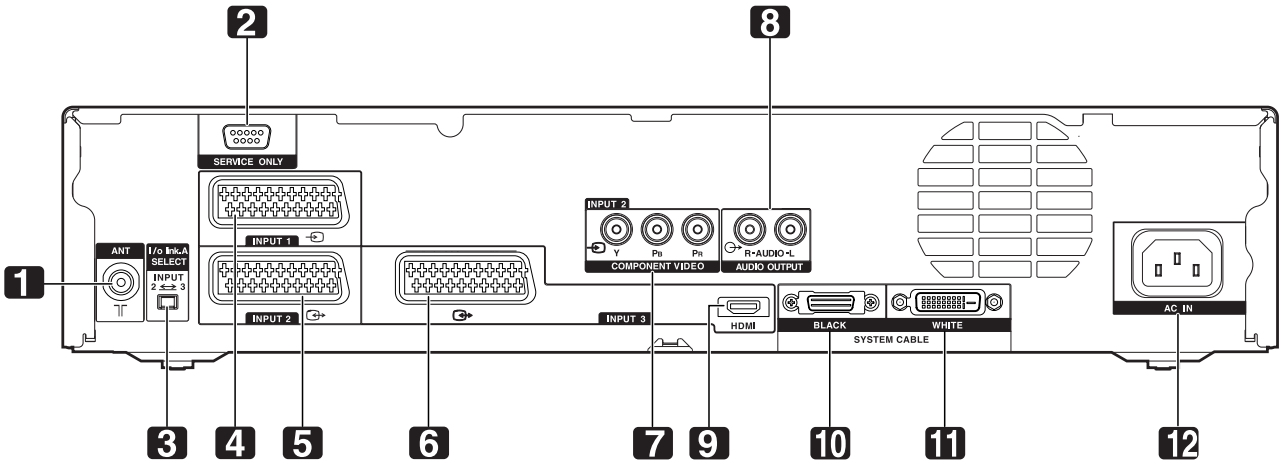

1 ANT (Antenna) input terminal
2 RS-232C terminal (used for factory setup)
3 i/o link.A SELECT switch
4 INPUT 1 terminal (SCART)
5 INPUT 2 terminal (SCART)
6 INPUT 3 terminal (SCART)
7 INPUT 2 terminals (COMPONENT VIDEO: Y, P_B, P_R)
8 AUDIO OUTPUT termimals
9 INPUT 3 terminal (HDMI)
10 SYSTEM CABLE terminal (BLACK)
11 SYSTEM CABLE terminal (WHITE)
12 AC IN terminal

■ Remote control unit

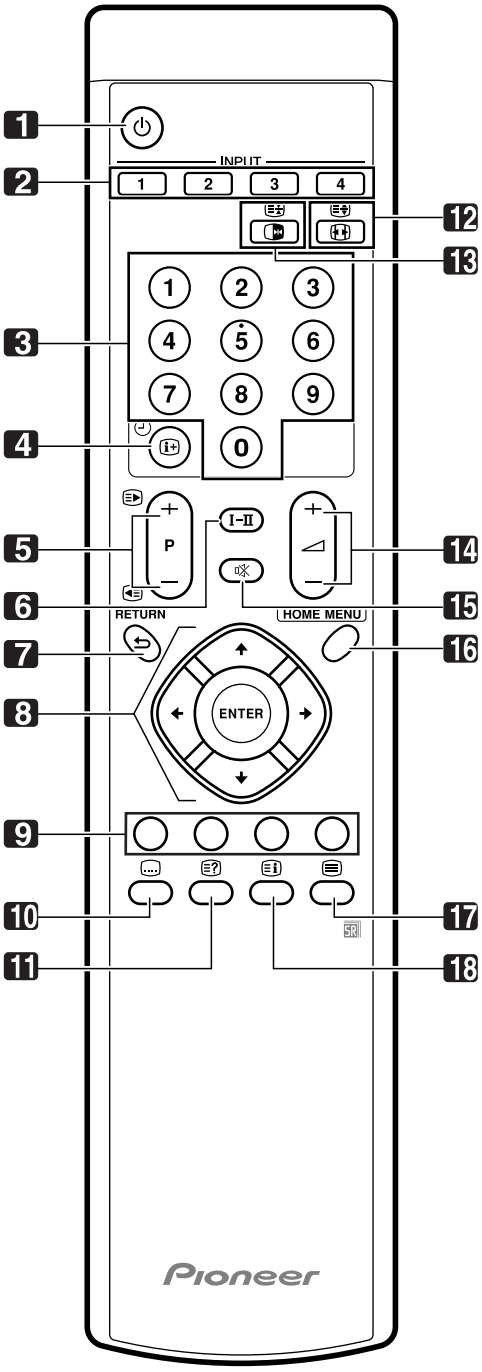

1 ⏻
Turns on the power to the Plasma Display or places it into the standby mode.

2 INPUT
Selects an input source of the Plasma Display.
(INPUT 1, INPUT 2, INPUT 3, INPUT 4)

3 0 – 9
TV/External input mode: Selects a channel.
TELETEXT mode: Selects a page.

4 ⓘ+ 🕘
Displays the channel information.

5 P+/P–
TV/External input mode: Selects a channel.
📄▶/◀📄
TELETEXT mode: Selects a page.

6 I-II
Sets the sound multiplex mode.

7 ⮌ **RETURN**
Restores the previous menu screen.

8 ↑/↓/←/→
Selects a desired item on the setting screen.
ENTER
Executes a command.

9 Colour (RED/GREEN/YELLOW/BLUE)
TELETEXT mode: Selects a page.

10 💬
Jumps to the Teletext subtitle page.

11 📄?
Displays hidden characters.

12 ⊞
TV/External input mode: Selects the screen size.
📄↕
TELETEXT mode: Switches Teletext images.
(full/upper half/lower half)

13 ⏭
TV/External input mode: Freezes a frame from a moving image. Press again to cancel the function.
📄↕
TELETEXT mode: Stops updating Teletext pages. Press again to release the hold mode.

14 🔊+/🔊–
Sets the volume.

15 🔇
Mutes the sound.

16 HOME MENU
TV/External Input mode: Displays the Menu screen.

17 ☰
Selects the TELETEXT mode.
(all TV image, all TEXT image, TV/TEXT image)

18 📄i
TELETEXT mode: Displays an Index page for the CEEFAX/FLOF format. Displays a TOP Over View page for the TOP format.

A

B

C

D

E

F

■ Cleaning

• Before shipping out the product, be sure to clean the following positions by using the prescribed cleaning tools:

Position to be cleaned	Cleaning tools	Remark
Fans	Cleaning paper : GED-008	Refer to "2.3 EXTERIOR SECTION" , "7.1.2 DISASSEMBLY SECTION".